# Sluitring D. 9 x 24 x 2 | Mondolfo Ferro 2-01299

Mondolfo Ferro MT3500 · 2017 · Tekening 33 · positie 8

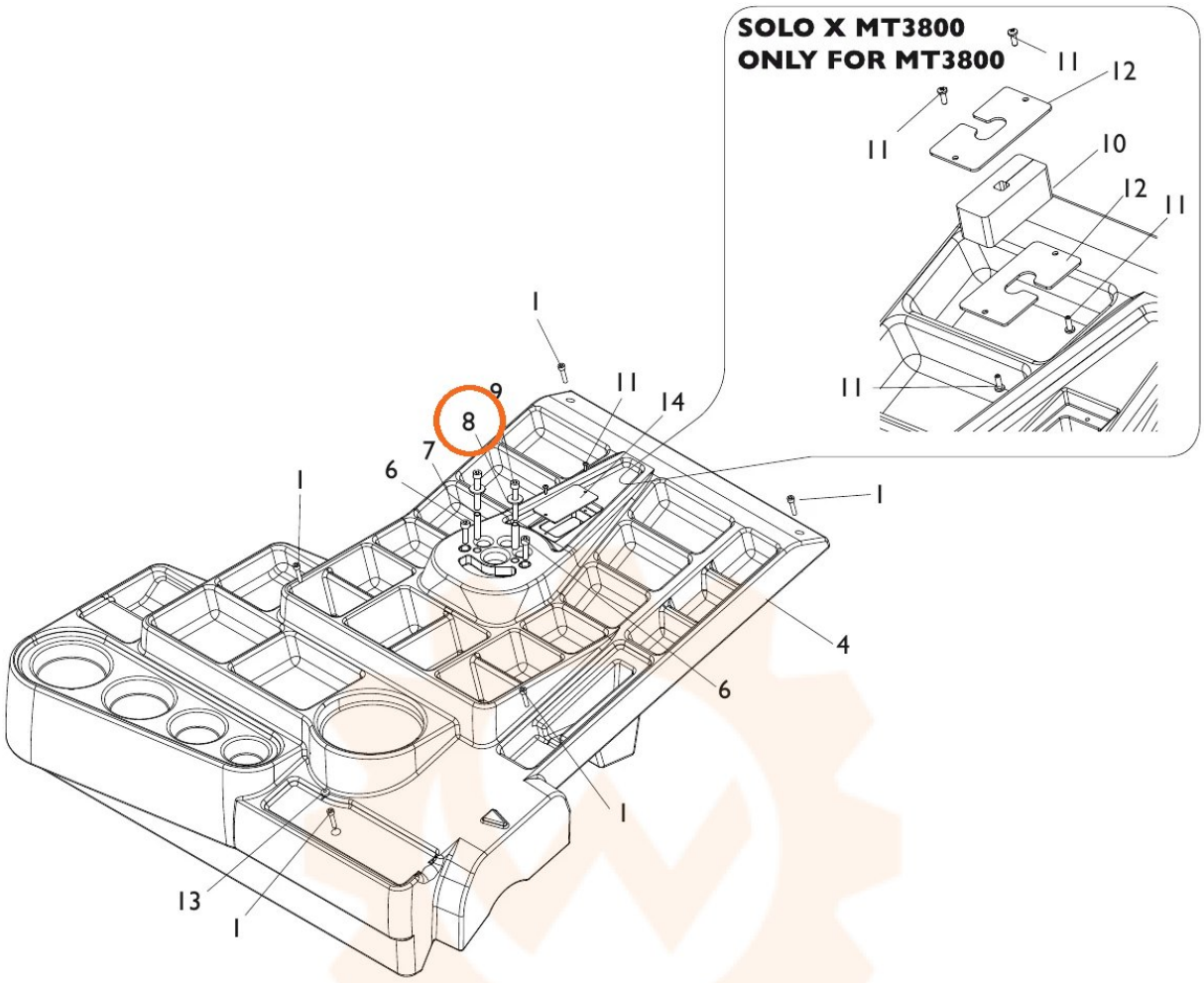


VISTA ANTERIORE
FRONT VIEW

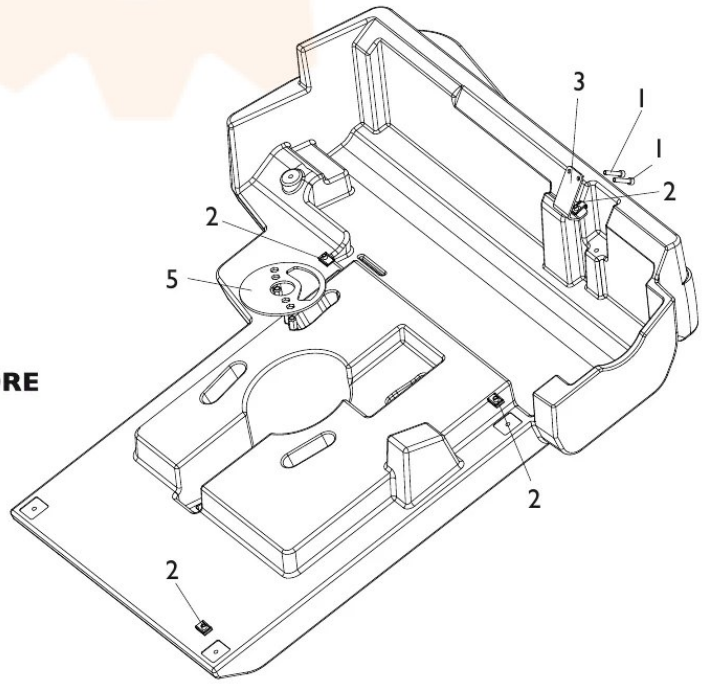


VISTA POSTERIORE
REAR VIEW