GRUPPO BRACCIO MOBILE
MOBILE ARM GROUP

PANZITTA SALES & SERVICE
72 George Avenue
Wilkes-Barre, PA 18705
570-822-6720 800-822-6720
www.panzittasales.com

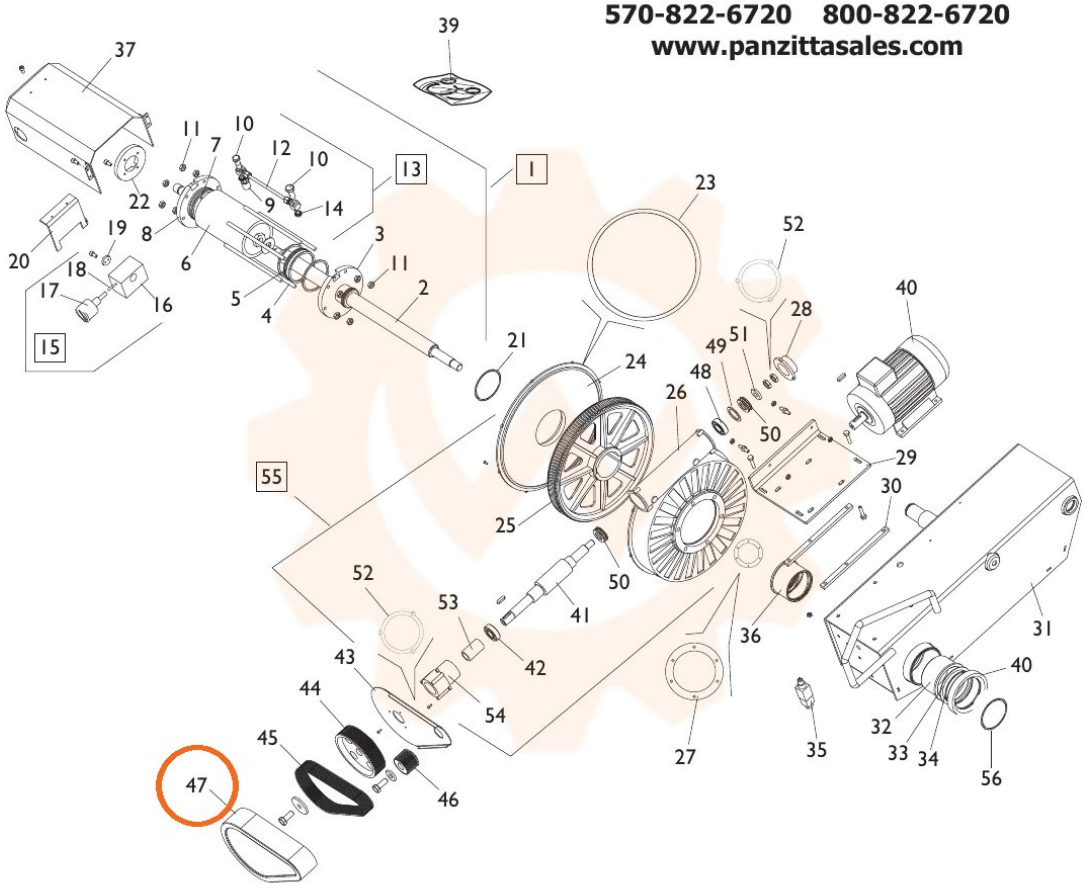

TORNA AL COMPLESSIVO
RETURNS TO OVERALL