CORGHI	A 9820 T.I	Fig. M	06 / 02	Filter assembly

PANZITTA SALES & SERVICE
72 George Avenue
Wilkes-Barre, PA 18705
570-822-6720 800-822-6720
www.panzittasales.com

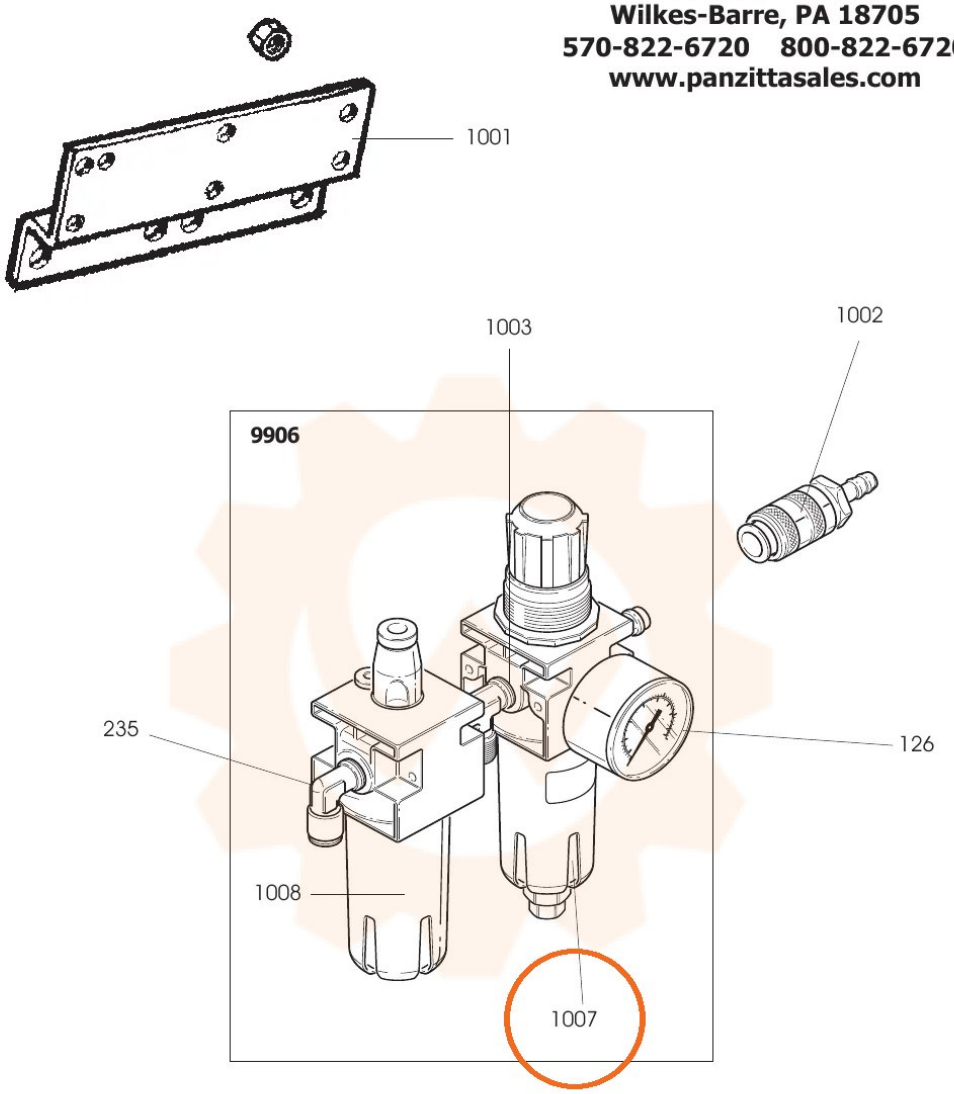

0126	900434818	MANOMETRO	PRESSURE GAUGE	DRUCKMESSER	MANOMETRE
0235	900450406	RACCORDO	CONNECTOR	ANSCHLUSS	RACCORD
1001	900335695	STAFFA	BRACKET	KLAUE	ETRIER
1002	900441899	GIUNTO	COUPLING	KUPPLUNG	ACCOUPLEMENT
1003	900433873	RACCORDO	CONNECTOR	ANSCHLUSS	RACCORD
9906	**900456522**	**FILTRO**	**FILTER**	**FILTER**	**FILTRE**
1007	900457512	BICCHIERE	BOWL	GLAS	BOL
1008	900457511	BICCHIERE	BOWL	GLAS	BOL