11-1-A Extra strong, 3-jaw universal puller, up to 520 mm spread, 200 mm reach



APPLICATION IMAGE



DESCRIPTION

The extra-strong 3-jaw universal puller is used for pulling heavy bearings, gears, and discs in all common sizes for crafts, workshops, and industry. It allows you to loosen any component that is mounted on a shaft and is freely accessible from the outside. Equipped with robust and adjustable standard jaws, the solid construction of the puller ensures powerful, non-destructive disassembly during both external extraction and internal extraction. The 3-jaw design guarantees even load distribution and thus a particularly secure grip on the part to be pulled.

APPLICATION AREA

For the removal of heavy bearings, gears, and discs in all common sizes for trade, workshop, and industry.

BENEFIT

- Screw connection allows easy loosening and particularly tight fastening of the jaws with an allen key
- 3-jaw ensures an even distribution of force and allows for greater pulling forces.
- Application also for eccentric components through freely movable, sliding puller jaws on the crossbar.
- Variable adjustment to any spread between 125 mm – 520 mm
- Safe mounting of the spindle with a movable spindle tip on both smooth surfaces and for centering (Switch Technology)
- Optional convertible from an external puller to an internal extractor by reversing the jaws.
- Anti-slip safety (spindle neck) at the spindle head for safe working with a wrench.
- Spindle outlet to protect the thread

OPERATION

- Place the puller jaws from the outside onto the part to be removed
- Slide the jaws under the component
- Use a wrench to secure the jaws
- Manually pull the spindle to fix it under pressure
- Activate the hexagon on the spindle head with a ratchet or a ring spanner until the component is released

MASTER DATA

GTIN [GTIN]	4021176075421
Country of origin	DE
Material	Tool steel
Series	11-A
Gross weight [kg]	22,72 kg
Package contents	1 piece
Packaging Act	PAPPE PAP 21
Worldwide sales capability	Yes (REACH, RoHS, POP, PROP65, TSCA)

SPARE PARTS

- 11-1-20_socket
- 11-1-206_pressure spindle
- 11-520_3-jaw crossbar
- 3-200-S_Standard-jaws (set)
- 633370_Double-sided spindle tip
- 637350_Mechanical spindle

Extra strong, 3-jaw universal puller, up to 520 mm spread, 200 mm reach

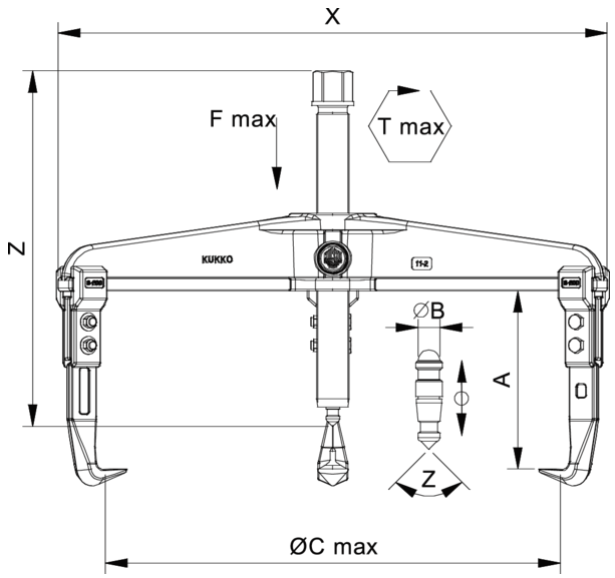

Abbreviation	Attribut	Wert
X	Total width [mm]	570 mm
Y	Total depth [mm]	570 mm
Z	Total height [mm]	416 mm
A	Clamping depth of external puller [mm]	200 mm
S1	Width across flats [mm]	41 mm
Cmin	Span outside pull-off (min.) [mm]	125 mm
Cmax	Span outside pull-off (max.) [mm]	520 mm
K	Hook root thickness at the tip (claw thickness K) [mm]	4 mm
J	Hook base width (claw width J) [mm]	35 mm
O	Hook base depth usable (claw depth usable O) [mm]	32,5 mm
H	Total hook root depth (total claw depth H) [mm]	67 mm
L	Total claw thickness (L+1mm) [mm]: (claw distance to base surface)	20 mm
Emin	Span inside pull-out (min.) [mm]	280 mm
Emax	Span inside pull-out (max.) [mm]	600 mm
Tmax	Max. torque [Nm]	650 Nm
Fmax	Max. tractive force [t]	20 t
Fmax	Max. tensile force [kN]	200 kN

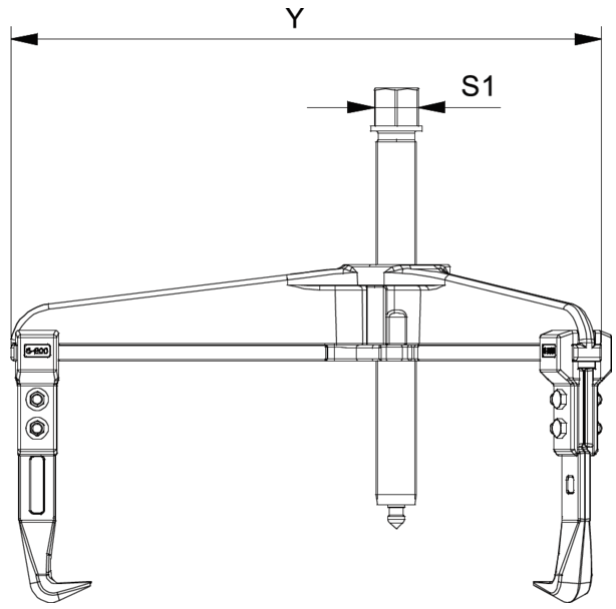

Abbreviation	Attribut	Wert
X	Total width [mm]	570 mm
Y	Total depth [mm]	570 mm
Z	Total height [mm]	416 mm
A	Clamping depth of external puller [mm]	200 mm
S1	Width across flats [mm]	41 mm
Cmin	Span outside pull-off (min.) [mm]	125 mm
Cmax	Span outside pull-off (max.) [mm]	520 mm
K	Hook root thickness at the tip (claw thickness K) [mm]	4 mm
J	Hook base width (claw width J) [mm]	35 mm
O	Hook base depth usable (claw depth usable O) [mm]	32,5 mm
H	Total hook root depth (total claw depth H) [mm]	67 mm
L	Total claw thickness (L+1mm) [mm]: (claw distance to base surface)	20 mm
Emin	Span inside pull-out (min.) [mm]	280 mm
Emax	Span inside pull-out (max.) [mm]	600 mm
Tmax	Max. torque [Nm]	650 Nm
Fmax	Max. tractive force [t]	20 t
Fmax	Max. tensile force [kN]	200 kN

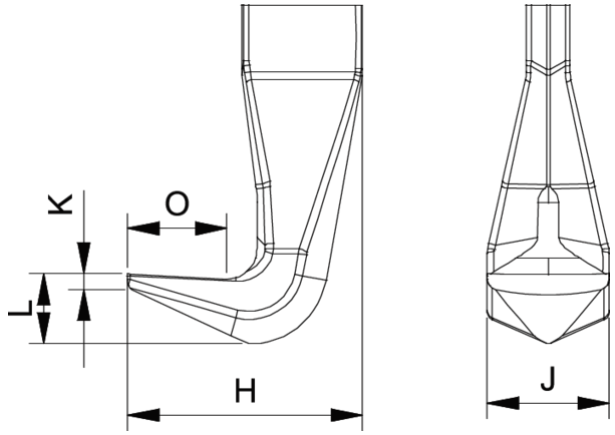

Abbreviation	Attribut	Wert
X	Total width [mm]	570 mm
Y	Total depth [mm]	570 mm
Z	Total height [mm]	416 mm

A	Clamping depth of external puller [mm]	200 mm
S1	Width across flats [mm]	41 mm
Cmin	Span outside pull-off (min.) [mm]	125 mm
Cmax	Span outside pull-off (max.) [mm]	520 mm
K	Hook root thickness at the tip (claw thickness K) [mm]	4 mm
J	Hook base width (claw width J) [mm]	35 mm
O	Hook base depth usable (claw depth usable O) [mm]	32,5 mm
H	Total hook root depth (total claw depth H) [mm]	67 mm
L	Total claw thickness (L+1mm) [mm]: (claw distance to base surface)	20 mm
Emin	Span inside pull-out (min.) [mm]	280 mm
Emax	Span inside pull-out (max.) [mm]	600 mm
Tmax	Max. torque [Nm]	650 Nm
Fmax	Max. tractive force [t]	20 t
Fmax	Max. tensile force [kN]	200 kN

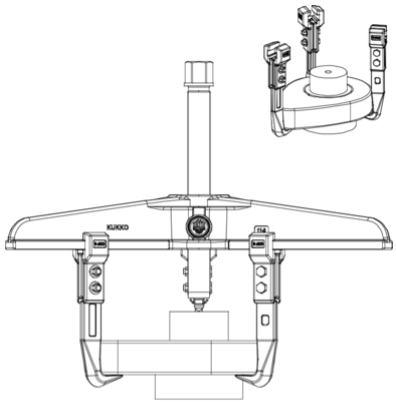

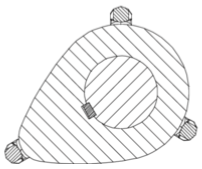

Abbreviation	Attribut	Wert
X	Total width [mm]	570 mm
Y	Total depth [mm]	570 mm
Z	Total height [mm]	416 mm
A	Clamping depth of external puller [mm]	200 mm
S1	Width across flats [mm]	41 mm
Cmin	Span outside pull-off (min.) [mm]	125 mm
Cmax	Span outside pull-off (max.) [mm]	520 mm
K	Hook root thickness at the tip (claw thickness K) [mm]	4 mm
J	Hook base width (claw width J) [mm]	35 mm
O	Hook base depth usable (claw depth usable O) [mm]	32,5 mm
H	Total hook root depth (total claw depth H) [mm]	67 mm
L	Total claw thickness (L+1mm) [mm]: (claw distance to base surface)	20 mm
Emin	Span inside pull-out (min.) [mm]	280 mm
Emax	Span inside pull-out (max.) [mm]	600 mm
Tmax	Max. torque [Nm]	650 Nm
Fmax	Max. tractive force [t]	20 t
Fmax	Max. tensile force [kN]	200 kN