202-S 3-jaw tab puller for fan wheels with height-adjustable jaws, up to 200 mm spread, 200 mm reach



DESCRIPTION

The 3-jaw puller with oscillating and adjustable-length jaws is used for removing fan wheels and ship screws in all common sizes for crafts, workshops, and industry. Thanks to the particularly slim design, the jaws grip through the two slots and engage the flange of the fan. The oscillating jaws adapt to any installation situation and can be universally used thanks to the adjustable gripping depth. Additionally, the jaws can be rotated 180° and used on both sides, allowing for different jaw sizes depending on the space below the part to be removed. The 3-jaw design ensures even load distribution and thus a particularly secure hold on the part to be removed.

APPLICATION AREA

To remove fan wheels in all common sizes for crafts, workshops, and industry.

BENEFIT

- Adjustable puller jaws for individual adjustment of the reach due to multiple drilling in the puller jaws
- The jaws are rotatable by 180° and can be used on both sides.
- Jaws with different claw sizes for flexible work
- Secure setup of the spindle with a swiveling spindle tip on both smooth surfaces and during centering (Switch Technology)
- 3-jaw ensures an even distribution of force and allows for greater pulling forces.
- Anti-slip safety (spindle neck) at the spindle head for safe working with a wrench.
- Spindle outlet for thread protection

OPERATION

- Position the puller jaws from the outside onto the part to be removed
- Swing the jaws under the component
- Manually pull the spindle to fix it in place
- Use a ratchet or a ring spanner to turn the hexagon at the spindle head until the component is loosened

MASTER DATA

GTIN [GTIN]	4021176027581
Country of origin	DE
Material	Tool steel
Series	202-S
Gross weight [kg]	1,74 kg
Package contents	1 piece
Packaging Act	PAPPE PAP 21
Worldwide sales capability	Yes (REACH, RoHS, POP, PROP65, TSCA)

SPARE PARTS

- 202-1-T_Crossbar
- 202-S-S_3 puller set
- 614240_Press spindle
- 614250_Mechanical spindle

APPLICATION IMAGE



DETAIL IMAGE



3-jaw tab puller for fan wheels with height-adjustable jaws, up to 200 mm spread, 200 mm reach

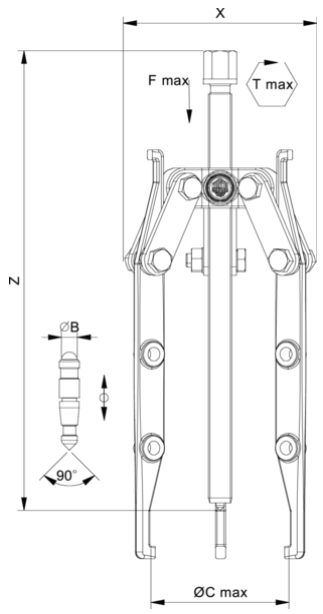

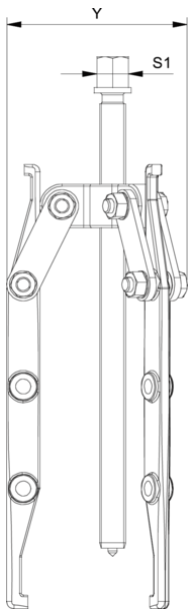

Abbreviation	Attribut	Wert
X	Total width [mm]	210 mm
Y	Total depth [mm]	210 mm
Z	Total height [mm]	275 mm
A	Clamping depth of external puller [mm]	200 mm
S1	Width across flats [mm]	17 mm
Cmin	Span outside pull-off (min.) [mm]	11 mm
Cmax	Span outside pull-off (max.) [mm]	200 mm
K	Hook root thickness at the tip (claw thickness K) [mm]	6 mm
J	Hook base width (claw width J) [mm]	6 mm
O	Hook base depth usable (claw depth usable O) [mm]	3,5 mm
H	Total hook root depth (total claw depth H) [mm]	8,5 mm
L	Total claw thickness (L+1mm) [mm]: (claw distance to base surface)	6 mm
Emin	Span inside pull-out (min.) [mm]	40 mm
Tmax	Max. torque [Nm]	35 Nm
Fmax	Max. tractive force [t]	2 t
Fmax	Max. tensile force [kN]	20 kN

Abbreviation	Attribut	Wert
X	Total width [mm]	210 mm
Y	Total depth [mm]	210 mm
Z	Total height [mm]	275 mm
A	Clamping depth of external puller [mm]	200 mm
S1	Width across flats [mm]	17 mm
Cmin	Span outside pull-off (min.) [mm]	11 mm
Cmax	Span outside pull-off (max.) [mm]	200 mm
K	Hook root thickness at the tip (claw thickness K) [mm]	6 mm
J	Hook base width (claw width J) [mm]	6 mm
O	Hook base depth usable (claw depth usable O) [mm]	3,5 mm
H	Total hook root depth (total claw depth H) [mm]	8,5 mm
L	Total claw thickness (L+1mm) [mm]: (claw distance to base surface)	6 mm
Emin	Span inside pull-out (min.) [mm]	40 mm
Tmax	Max. torque [Nm]	35 Nm
Fmax	Max. tractive force [t]	2 t
Fmax	Max. tensile force [kN]	20 kN

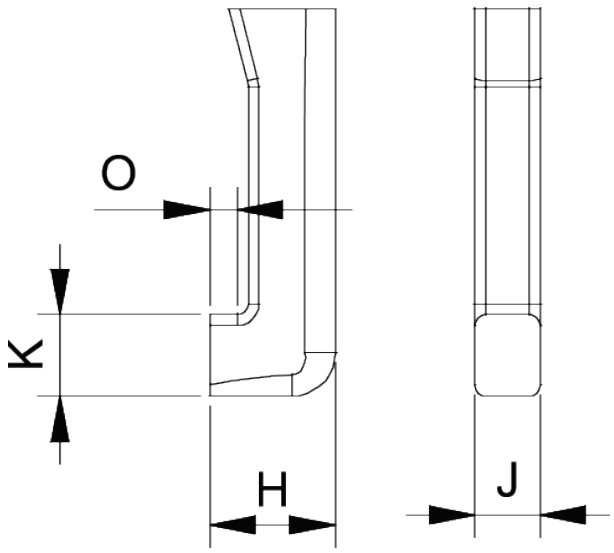

Abbreviation	Attribut	Wert
X	Total width [mm]	210 mm
Y	Total depth [mm]	210 mm
Z	Total height [mm]	275 mm
A	Clamping depth of external puller [mm]	200 mm
S1	Width across flats [mm]	17 mm
Cmin	Span outside pull-off (min.) [mm]	11 mm
Cmax	Span outside pull-off (max.) [mm]	200 mm
K	Hook root thickness at the tip (claw thickness K) [mm]	6 mm
J	Hook base width (claw width J) [mm]	6 mm
O	Hook base depth usable (claw depth usable O) [mm]	3,5 mm
H	Total hook root depth (total claw depth H) [mm]	8,5 mm
L	Total claw thickness (L+1mm) [mm]: (claw distance to base surface)	6 mm
Emin	Span inside pull-out (min.) [mm]	40 mm
Tmax	Max. torque [Nm]	35 Nm
Fmax	Max. tractive force [t]	2 t
Fmax	Max. tensile force [kN]	20 kN

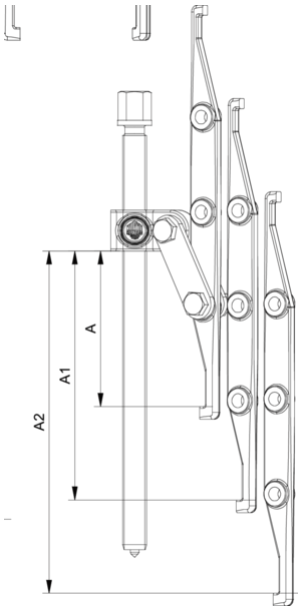

Abbreviation	Attribut	Wert
X	Total width [mm]	210 mm
Y	Total depth [mm]	210 mm
Z	Total height [mm]	275 mm
A	Clamping depth of external puller [mm]	200 mm
S1	Width across flats [mm]	17 mm
Cmin	Span outside pull-off (min.) [mm]	11 mm
Cmax	Span outside pull-off (max.) [mm]	200 mm
K	Hook root thickness at the tip (claw thickness K) [mm]	6 mm
J	Hook base width (claw width J) [mm]	6 mm
O	Hook base depth usable (claw depth usable O) [mm]	3,5 mm
H	Total hook root depth (total claw depth H) [mm]	8,5 mm
L	Total claw thickness (L+1mm) [mm]: (claw distance to base surface)	6 mm
Emin	Span inside pull-out (min.) [mm]	40 mm
Tmax	Max. torque [Nm]	35 Nm
Fmax	Max. tractive force [t]	2 t
Fmax	Max. tensile force [kN]	20 kN

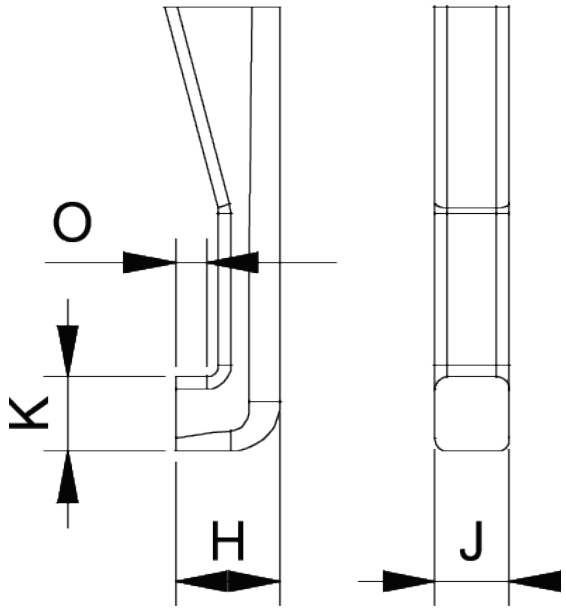

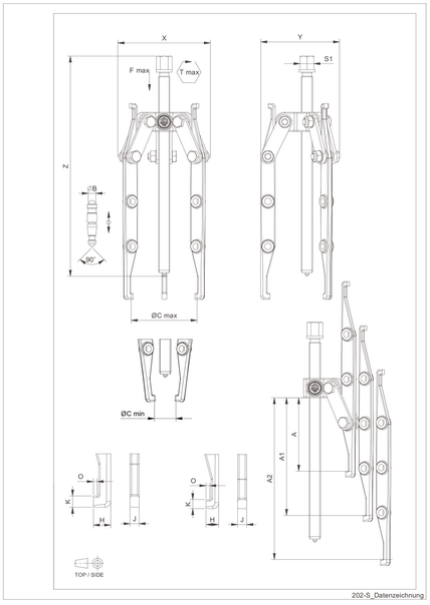

Abbreviation	Attribut	Wert
X	Total width [mm]	210 mm
Y	Total depth [mm]	210 mm
Z	Total height [mm]	275 mm
A	Clamping depth of external puller [mm]	200 mm
S1	Width across flats [mm]	17 mm
Cmin	Span outside pull-off (min.) [mm]	11 mm
Cmax	Span outside pull-off (max.) [mm]	200 mm
K	Hook root thickness at the tip (claw thickness K) [mm]	6 mm
J	Hook base width (claw width J) [mm]	6 mm
O	Hook base depth usable (claw depth usable O) [mm]	3,5 mm
H	Total hook root depth (total claw depth H) [mm]	8,5 mm
L	Total claw thickness (L+1mm) [mm]: (claw distance to base surface)	6 mm
Emin	Span inside pull-out (min.) [mm]	40 mm
Tmax	Max. torque [Nm]	35 Nm
Fmax	Max. tractive force [t]	2 t

Abbreviation	Attribut	Wert
X	Total width [mm]	210 mm
Y	Total depth [mm]	210 mm
Z	Total height [mm]	275 mm
A	Clamping depth of external puller [mm]	200 mm
S1	Width across flats [mm]	17 mm
Cmin	Span outside pull-off (min.) [mm]	11 mm
Cmax	Span outside pull-off (max.) [mm]	200 mm
K	Hook root thickness at the tip (claw thickness K) [mm]	6 mm
J	Hook base width (claw width J) [mm]	6 mm
O	Hook base depth usable (claw depth usable O) [mm]	3,5 mm
H	Total hook root depth (total claw depth H) [mm]	8,5 mm
L	Total claw thickness (L+1mm) [mm]: (claw distance to base surface)	6 mm
Emin	Span inside pull-out (min.) [mm]	40 mm
Tmax	Max. torque [Nm]	35 Nm
Fmax	Max. tractive force [t]	2 t

Fmax	Max. tensile force [kN]	20 kN

Fmax	Max. tensile force [kN]	20 kN