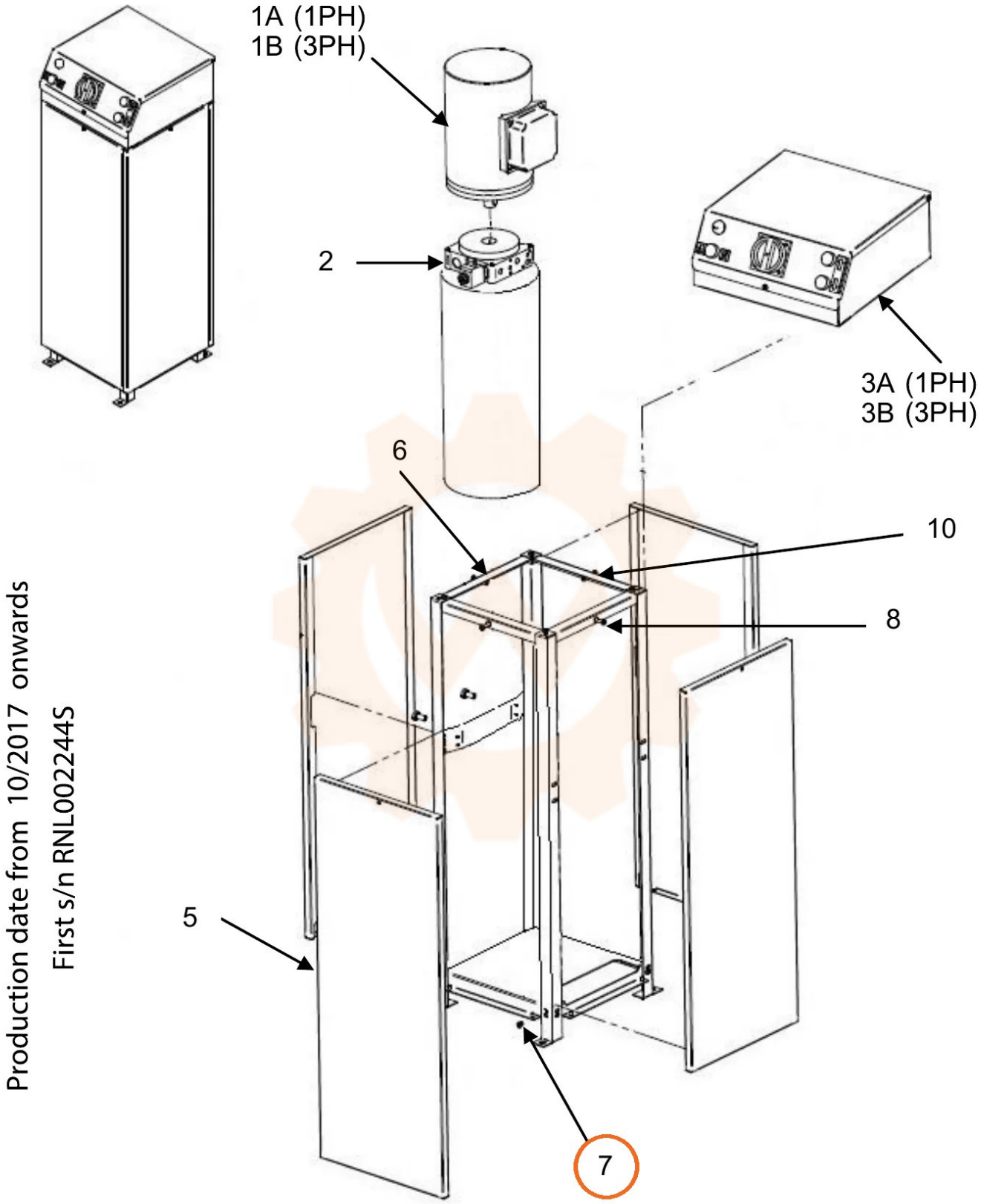
1A (1PH)
1B (3PH)
2
3A (1PH)
3B (3PH)
6
10
8
5
7
Production date from 10/2017 onwards
First s/n RNL002244S