Printer usb wifi win 7 | Mondolfo Ferro 5-127203

Mondolfo Ferro Trigon 724 · 2007 · Tekening 1 · positie 11

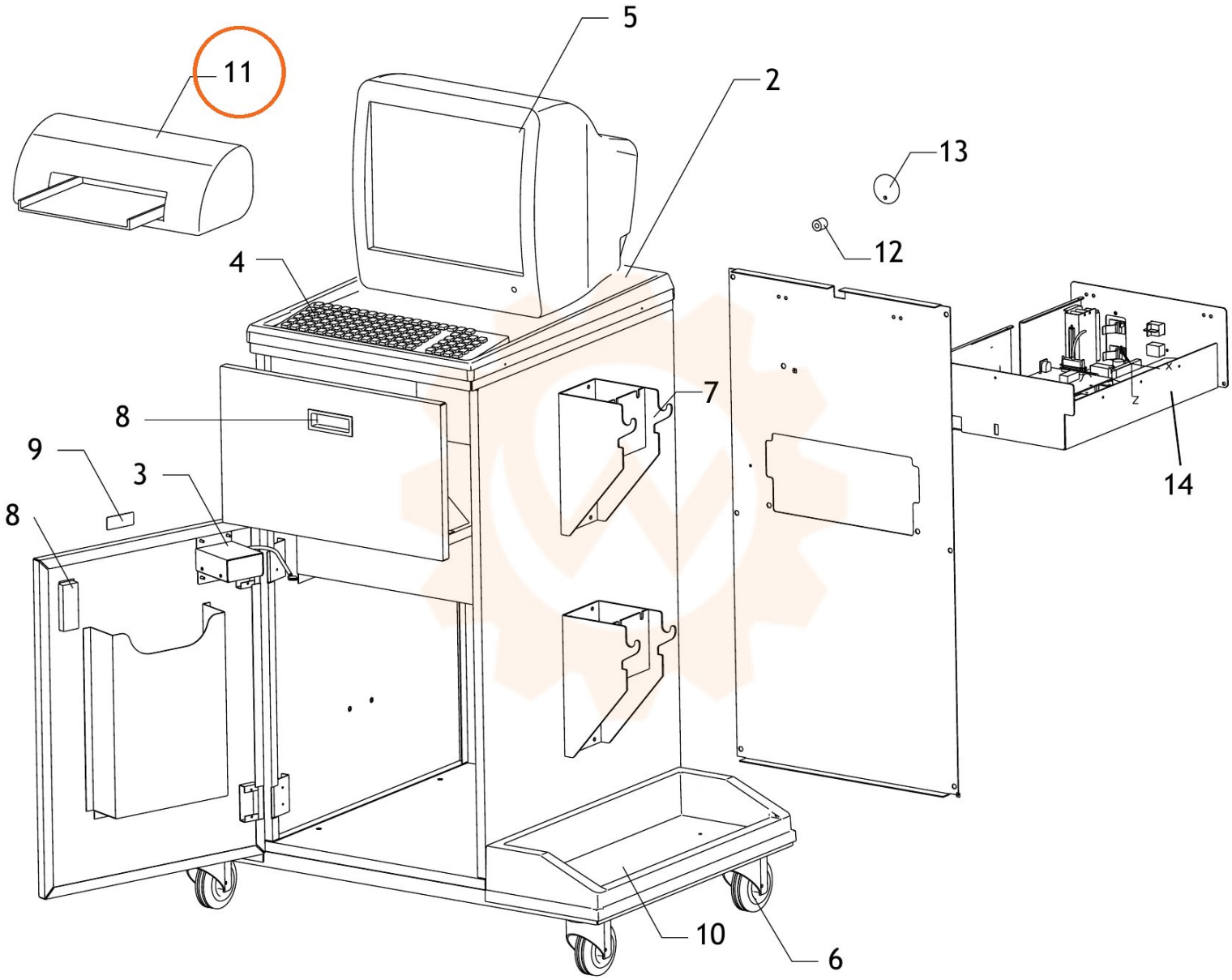
11
5
2
13
12
4
7
8
9
3
8
14
10
6