46-2-A 2-jaw universal puller with swiveling jaws, combination crossbar, up to 500 mm spread, 450 mm reach



DESCRIPTION

The heavy, 2-jaw universal puller with swiveling jaws and combination crossbar is used to extract large bearings, gears, and discs in all common sizes for crafts, workshops, and industry. It allows for the loosening of any component that sits on a shaft and is accessible from the outside. The swiveling jaws also ensure maximum freedom of movement for individual adjustment to the respective spread and depth, even in constrained environmental conditions. Thanks to the combination crossbar, the puller can be used as both a 2-jaw and a 3-jaw puller.

APPLICATION AREA

To extract large bearings, gears, and discs in all common sizes for craftsmanship, workshop, and industry.

BENEFIT

- Swiveling jaws allow for operation in the tightest spaces while simultaneously providing individual adjustment to the spread and depth.
- The crossbar can be used in both 2-jaw and 3-jaw versions.
- Anti-slip safety (spindle neck) at spindle head for safe working with wrench.
- Spindle outlet to protect the thread

OPERATION

- Swing the jaws from the outside to the part to be extracted
- Slide the jaws under the component
- Pull the spindle manually to fix it by applying pressure
- Move the hexagon drive (male) on the spindle head with a ratchet or a ring wrench until the part is released

MASTER DATA

GTIN [GTIN]	4021176017193
Country of origin	DE
Material	Tool steel
Series	46
Gross weight [kg]	12,235 kg
Package contents	1 piece
Packaging Act	PAPPE PAP 21
Worldwide sales capability	Yes (REACH, RoHS, POP, PROP65, TSCA)

SPARE PARTS

- 46-450_Jaws for series 46/47
- 46-47-T_Crossbar for puller 46/47
- 633370_Double-sided spindle tip
- 633500_Mechanical pressure spindle

DETAIL IMAGE



2-jaw universal puller with swiveling jaws, combination crossbar, up to 500 mm spread, 450 mm reach

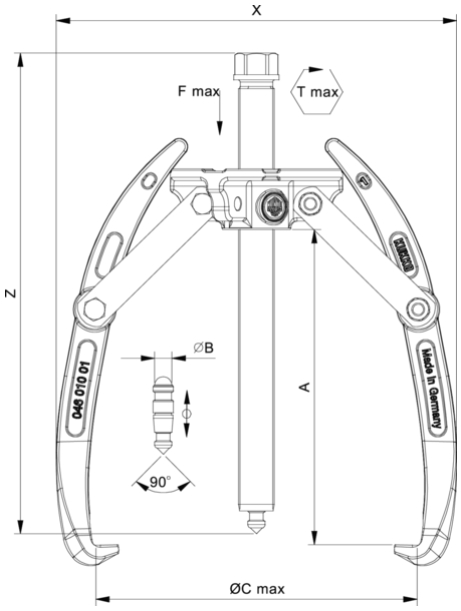

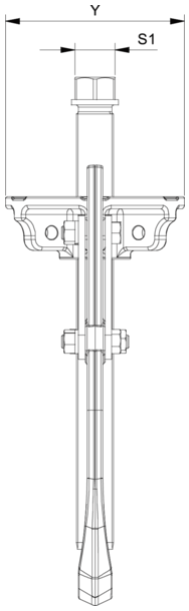

Abbreviation	Attribut	Wert
X	Total width [mm]	546 mm
Y	Total depth [mm]	160 mm
Z	Total height [mm]	535 mm
A	Clamping depth of external puller [mm]	450 mm
S1	Width across flats [mm]	36 mm
Cmin	Span outside pull-off (min.) [mm]	0 mm
Cmax	Span outside pull-off (max.) [mm]	500 mm
K	Hook root thickness at the tip (claw thickness K) [mm]	6 mm
J	Hook base width (claw width J) [mm]	30 mm
O	Hook base depth usable (claw depth usable O) [mm]	27 mm
H	Total hook root depth (total claw depth H) [mm]	50 mm
L	Total claw thickness (L+1mm) [mm]: (claw distance to base surface)	22 mm
Tmax	Max. torque [Nm]	450 Nm
Fmax	Max. tractive force [t]	12 t
Fmax	Max. tensile force [kN]	120 kN

Abbreviation	Attribut	Wert
X	Total width [mm]	546 mm
Y	Total depth [mm]	160 mm
Z	Total height [mm]	535 mm
A	Clamping depth of external puller [mm]	450 mm
S1	Width across flats [mm]	36 mm
Cmin	Span outside pull-off (min.) [mm]	0 mm
Cmax	Span outside pull-off (max.) [mm]	500 mm
K	Hook root thickness at the tip (claw thickness K) [mm]	6 mm
J	Hook base width (claw width J) [mm]	30 mm
O	Hook base depth usable (claw depth usable O) [mm]	27 mm
H	Total hook root depth (total claw depth H) [mm]	50 mm
L	Total claw thickness (L+1mm) [mm]: (claw distance to base surface)	22 mm
Tmax	Max. torque [Nm]	450 Nm
Fmax	Max. tractive force [t]	12 t
Fmax	Max. tensile force [kN]	120 kN

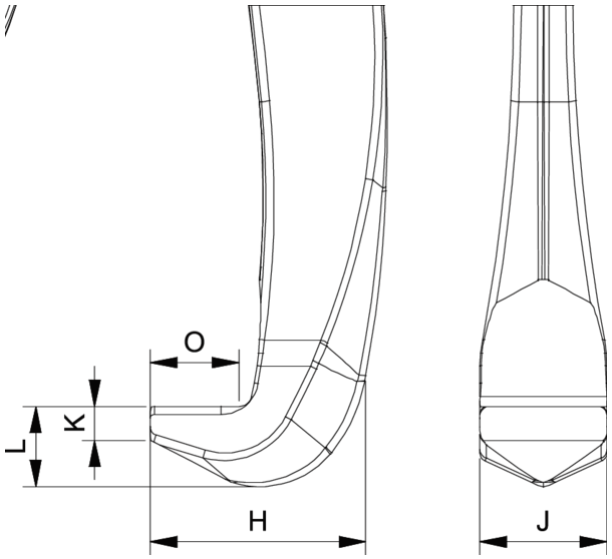

Abbreviation	Attribut	Wert

X	Total width [mm]	546 mm
Y	Total depth [mm]	160 mm
Z	Total height [mm]	535 mm
A	Clamping depth of external puller [mm]	450 mm
S1	Width across flats [mm]	36 mm
Cmin	Span outside pull-off (min.) [mm]	0 mm
Cmax	Span outside pull-off (max.) [mm]	500 mm
K	Hook root thickness at the tip (claw thickness K) [mm]	6 mm
J	Hook base width (claw width J) [mm]	30 mm
O	Hook base depth usable (claw depth usable O) [mm]	27 mm
H	Total hook root depth (total claw depth H) [mm]	50 mm
L	Total claw thickness (L+1mm) [mm]: (claw distance to base surface)	22 mm
Tmax	Max. torque [Nm]	450 Nm
Fmax	Max. tractive force [t]	12 t
Fmax	Max. tensile force [kN]	120 kN