IMPIANTO ELETTRICO
ELECTRICAL SYSTEM

VERSIONE DV
2 SPEED VERSION

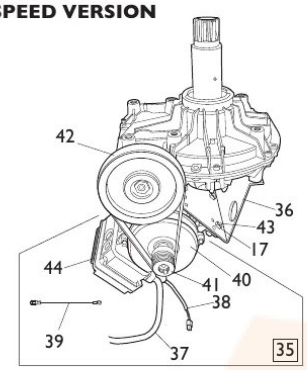

VERSIONE PNEUMATICA
PNEUMATIC VERSION

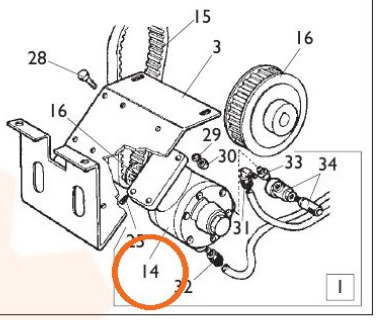

VERSIONE CCSAUS
CCSAUS VERSION

SOLO X CANADA
ONLY FOR CANADA

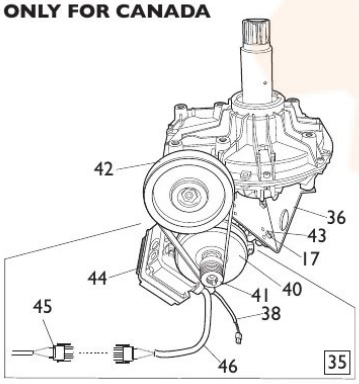

VERSIONE 3ph / 1ph
3ph / 1ph VERSION

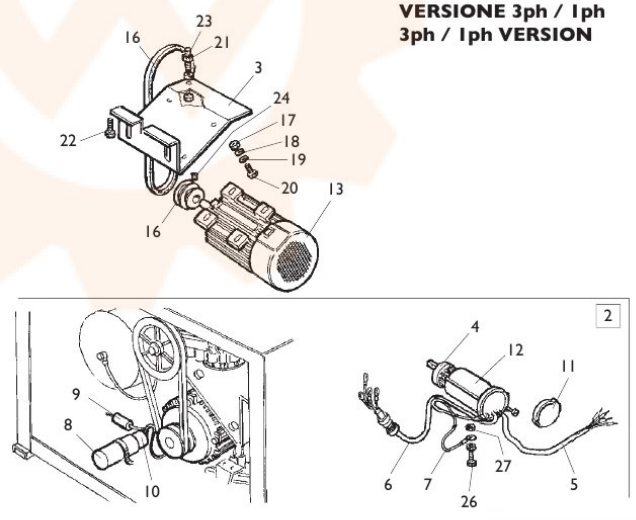

PANZITTA SALES & SERVICE
72 George Avenue
Wilkes-Barre, PA 18705
570-822-6720 800-822-6720
www.panzittasales.com