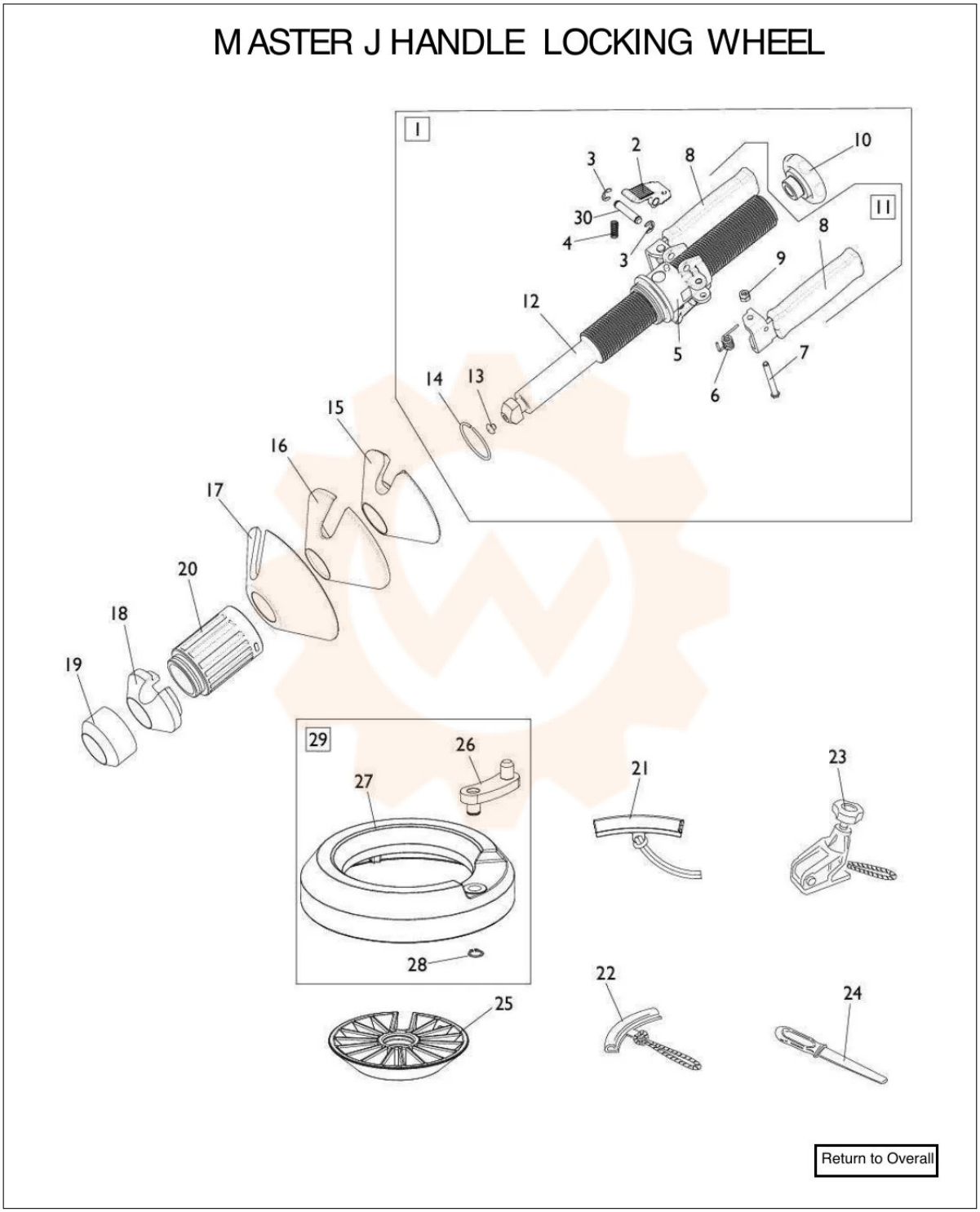
MASTER J HANDLE LOCKING WHEEL
1
11
29
Return to Overall