207-00 3-jaw tab puller with oscillating, height-adjustable jaws, combination crossbar, up to 120 mm spread, 100 mm reach



APPLICATION IMAGE

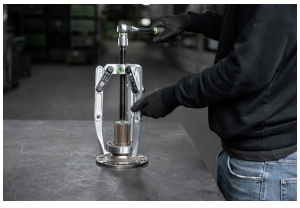

DESCRIPTION

The heavy 2-jaw or 3-jaw puller with oscillating, height-adjustable pulling jaws and combination crossbar is used for concentric extraction of large bearings, gears, and discs in all common sizes for crafts, workshops, and industry. It can loosen any component that sits on a shaft and is freely accessible from the outside. The oscillating pulling jaws adapt to any installation situation and are universally applicable due to the adjustable reach. Thanks to the combination crossbar, the puller can be used in both 2-jaw and 3-jaw configurations. Depending on the design, the claw shape differs. The 3-jaw feature ensures even load distribution and thus a particularly secure grip on the part being extracted.

APPLICATION AREA

For centralized extraction of large bearings, gears, and discs in all common sizes for craft, workshop, and industry.

BENEFIT

- Adjustable Puller Jaws for Individual Adjustment of Reach Depth
- Pulling jaws with different claw shapes for flexible working.
- Thanks to the crossbar, the puller can be used for 2-jaw and 3-jaw pulling.
- The claw end with slot provides support for screw for additional support during pulling out.
- Secure mounting of the spindle through the rotatable spindle tip on both smooth surfaces and in centering (Switch Technology)
- 3-jaw ensures an even distribution of force and allows for greater pulling forces
- Anti-slip safety (spindle neck) at spindle head for safe working with wrench
- Spindle outlet to protect the thread

OPERATION

- Place the puller jaws from the outside onto the part to be removed
- Pivot the claws under the component
- Manually pull the spindle to secure it
- Use a ratchet or a ring spanner to turn the hexagon on the spindle head until the component is loosened

MASTER DATA

GTIN [GTIN]	4021176029721
Country of origin	DE
Material	Tool steel
Series	207
Gross weight [kg]	0,73 kg
Package contents	1 piece
Packaging Act	Rezykkat rHDPE 61
Worldwide sales capability	Yes (REACH, RoHS, POP, PROP65, TSCA)

SPARE PARTS

- 203-0-T_crossbar
- 206-00-100-S_3 puller jaws (set)
- 612110_Mechanical chuck spindle

3-jaw tab puller with oscillating, height-adjustable jaws, combination crossbar, up to 120 mm spread, 100 mm reach

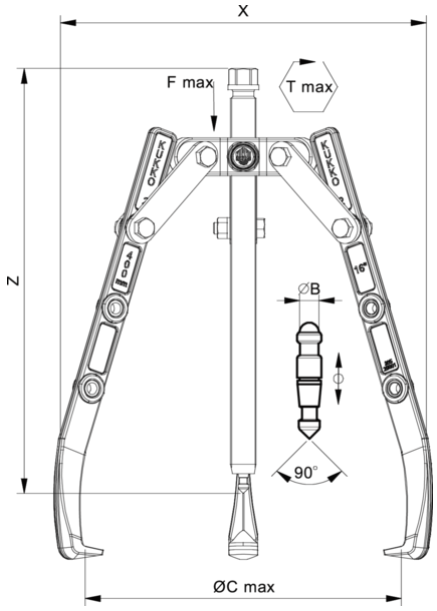

Abbreviation	Attribut	Wert
X	Total width [mm]	150 mm
Y	Total depth [mm]	150 mm
Z	Total height [mm]	130 mm
A	Clamping depth of external puller [mm]	100 mm
S1	Width across flats [mm]	13 mm
Cmin	Span outside pull-off (min.) [mm]	0 mm
Cmax	Span outside pull-off (max.) [mm]	120 mm
K	Hook root thickness at the tip (claw thickness K) [mm]	2 mm
J	Hook base width (claw width J) [mm]	14 mm
O	Hook base depth usable (claw depth usable O) [mm]	12 mm
H	Total hook root depth (total claw depth H) [mm]	27 mm
L	Total claw thickness (L+1mm) [mm]: (claw distance to base surface)	7,5 mm
Tmax	Max. torque [Nm]	50 Nm
Fmax	Max. tractive force [t]	3.5 t
Fmax	Max. tensile force [kN]	35 kN

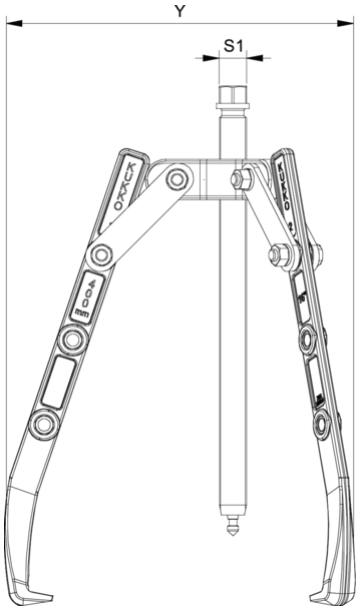

Abbreviation	Attribut	Wert
X	Total width [mm]	150 mm
Y	Total depth [mm]	150 mm
Z	Total height [mm]	130 mm
A	Clamping depth of external puller [mm]	100 mm
S1	Width across flats [mm]	13 mm
Cmin	Span outside pull-off (min.) [mm]	0 mm
Cmax	Span outside pull-off (max.) [mm]	120 mm
K	Hook root thickness at the tip (claw thickness K) [mm]	2 mm
J	Hook base width (claw width J) [mm]	14 mm
O	Hook base depth usable (claw depth usable O) [mm]	12 mm
H	Total hook root depth (total claw depth H) [mm]	27 mm
L	Total claw thickness (L+1mm) [mm]: (claw distance to base surface)	7,5 mm
Tmax	Max. torque [Nm]	50 Nm
Fmax	Max. tractive force [t]	3.5 t
Fmax	Max. tensile force [kN]	35 kN

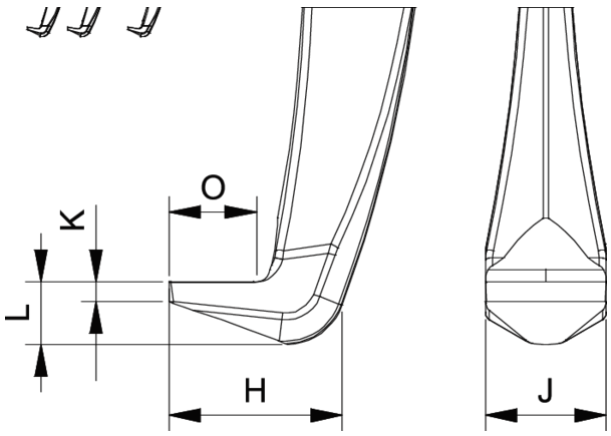

Abbreviation	Attribut	Wert
X	Total width [mm]	150 mm
Y	Total depth [mm]	150 mm
Z	Total height [mm]	130 mm
A	Clamping depth of external puller [mm]	100 mm
S1	Width across flats [mm]	13 mm

Cmin	Span outside pull-off (min.) [mm]	0 mm
Cmax	Span outside pull-off (max.) [mm]	120 mm
K	Hook root thickness at the tip (claw thickness K) [mm]	2 mm
J	Hook base width (claw width J) [mm]	14 mm
O	Hook base depth usable (claw depth usable O) [mm]	12 mm
H	Total hook root depth (total claw depth H) [mm]	27 mm
L	Total claw thickness (L+1mm) [mm]: (claw distance to base surface)	7,5 mm
Tmax	Max. torque [Nm]	50 Nm
Fmax	Max. tractive force [t]	3.5 t
Fmax	Max. tensile force [kN]	35 kN

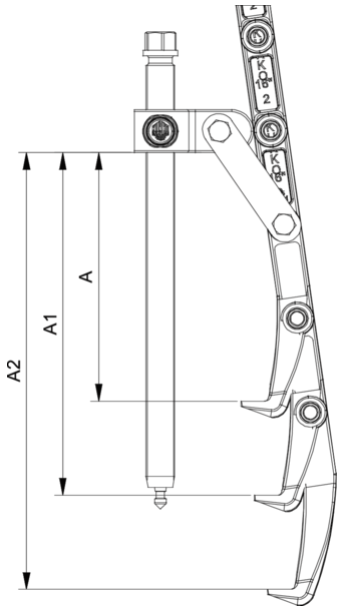

Abbreviation	Attribut	Wert
X	Total width [mm]	150 mm
Y	Total depth [mm]	150 mm
Z	Total height [mm]	130 mm
A	Clamping depth of external puller [mm]	100 mm
S1	Width across flats [mm]	13 mm
Cmin	Span outside pull-off (min.) [mm]	0 mm
Cmax	Span outside pull-off (max.) [mm]	120 mm
K	Hook root thickness at the tip (claw thickness K) [mm]	2 mm
J	Hook base width (claw width J) [mm]	14 mm
O	Hook base depth usable (claw depth usable O) [mm]	12 mm
H	Total hook root depth (total claw depth H) [mm]	27 mm
L	Total claw thickness (L+1mm) [mm]: (claw distance to base surface)	7,5 mm
Tmax	Max. torque [Nm]	50 Nm
Fmax	Max. tractive force [t]	3.5 t
Fmax	Max. tensile force [kN]	35 kN

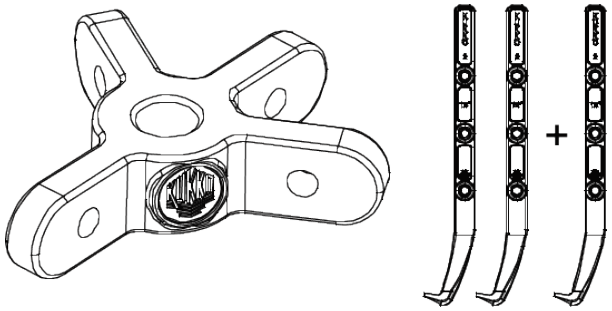

Abbreviation	Attribut	Wert
X	Total width [mm]	150 mm
Y	Total depth [mm]	150 mm
Z	Total height [mm]	130 mm
A	Clamping depth of external puller [mm]	100 mm
S1	Width across flats [mm]	13 mm
Cmin	Span outside pull-off (min.) [mm]	0 mm
Cmax	Span outside pull-off (max.) [mm]	120 mm
K	Hook root thickness at the tip (claw thickness K) [mm]	2 mm
J	Hook base width (claw width J) [mm]	14 mm
O	Hook base depth usable (claw depth usable O) [mm]	12 mm
H	Total hook root depth (total claw depth H) [mm]	27 mm
L	Total claw thickness (L+1mm) [mm]: (claw distance to base surface)	7,5 mm
Tmax	Max. torque [Nm]	50 Nm
Fmax	Max. tractive force [t]	3.5 t
Fmax	Max. tensile force [kN]	35 kN