Filter | Mondolfo Ferro 4-116741

Mondolfo Ferro TITANX3000E-X3500E · 2024 · Tekening 6 · positie 6

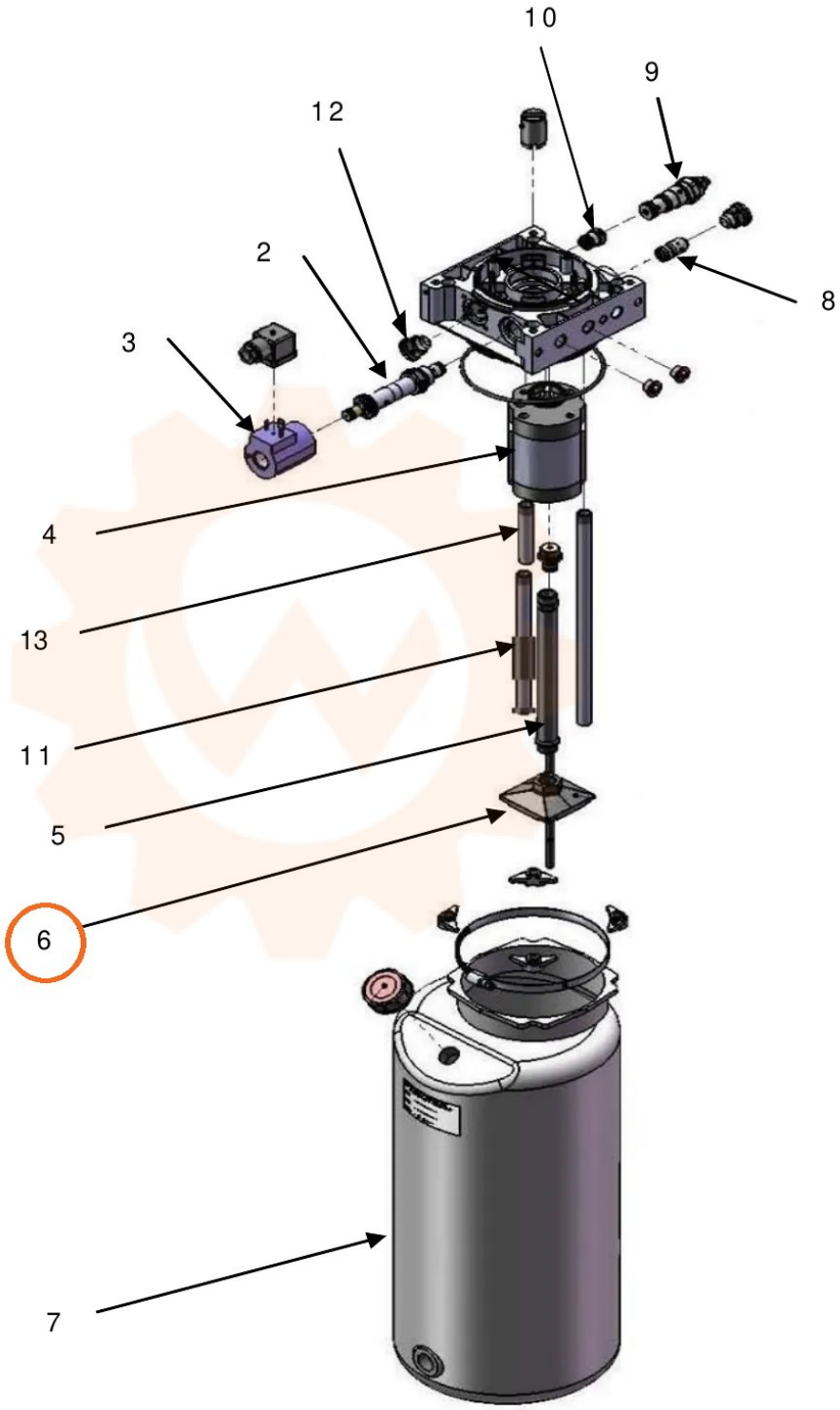

Production date from 11/2015 to 09/2017
Last s/n RNL002236S