# 20-10-2 2-jaw Universal Puller, up to 120 mm spread, 200 mm reach with extended jaws

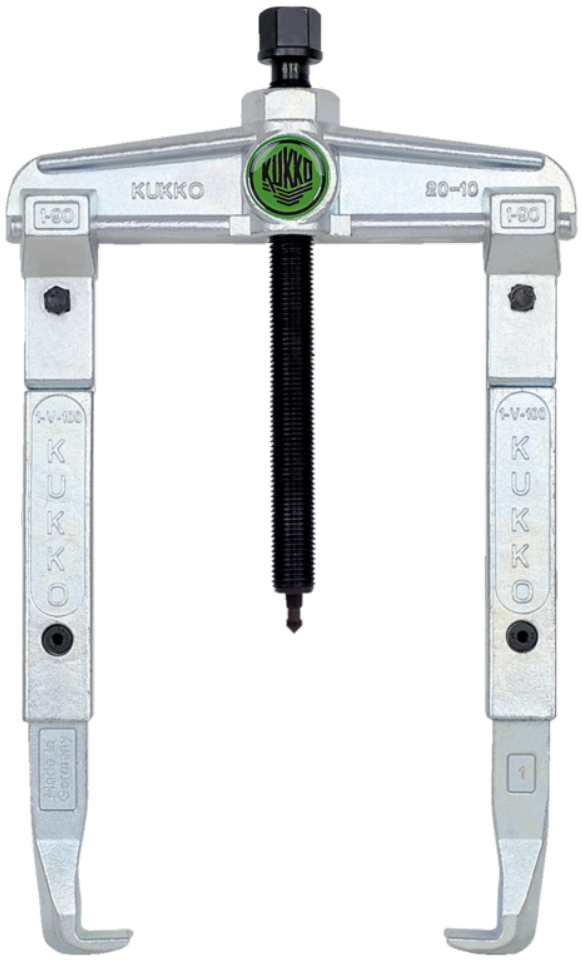


## DESCRIPTION

The 2-jaw universal puller with extended jaws is used for pulling deeply seated bearings, gears and washers in all common sizes for craftsmen, workshops and industry. This makes it possible to loosen any component that sits on a shaft and is freely accessible from the outside. Equipped with robust and adjustable standard jaws, the puller all-rounder ensures particularly safe, non-destructive Removing for both external extraction and internal extraction.

## APPLICATION AREA

To remove bearings, gears, and discs in all common sizes for craft, workshop, and industry.

## BENEFIT

- The screw connection allows easy loosening and particularly tight fastening of the jaws with an allen key
- Application also for eccentric components through freely movable, sliding jaws on the crossbar.
- Hexagonal profile on the crossbar for secure counter-holding
- Variable adjustment to any spread between 0 mm – 120 mm
- Shear-safe suspension of the claw in the sliding piece (ARMLOCK Technology)
- Safe positioning of the spindle through a rotatable spindle tip on both smooth surfaces and during centering (SWITCH Technology)
- Optional convertible from an external puller to an internal extractor by reversing the jaws.
- Anti-slip safety (spindle neck) at the spindle head for safe working with socket wrench.
- Spindle run-out to protect the thread
- Jaws, spindle, and crossbar have a spare part number for easy reordering.
- Pullers are labeled with technical attributes and manufacturer information (label)

## OPERATION

- Place the puller jaws from the outside onto the part to be pulled off
- Slide the claws under the component
- Use a wrench to secure the jaws
- Manually pull the spindle for fixation
- Set the hexagon at the spindle head in motion with a ratchet or a box wrench until the component is released

## APPLICATION IMAGE



## MASTER DATA

| | |
|---|---|
| GTIN [GTIN] | 4021176466496 |
| Country of origin | DE |
| Material | Tool steel |
| Series | 20-Classic |
| Gross weight [kg] | 2,13 kg |
| Package contents | 1 piece |
| Packaging Act | PAPPE PAP 21 |
| Worldwide sales capability | Yes (REACH, RoHS, POP, PROP65, TSCA) |

## SPARE PARTS

- 1-190-P_Standard-jaws
- 1-V-100-P_2 jaw extensions (pair)
- 20-10-T crossbar für 20-10
- 614160_Mechanical pressure spindle
- K-2030-A-KIT

# 2-jaw Universal Puller, up to 120 mm spread, 200 mm reach with extended jaws

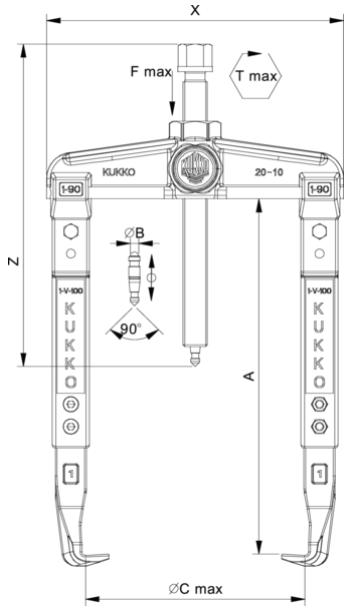





| Abbreviation | Attribut | Wert |
|---|---|---|
| X | Total width [mm] | 172 mm |
| Z | Total height [mm] | 183 mm |
| A | Clamping depth of external puller [mm] | 200 mm |
| S1 | Width across flats [mm] | 17 mm |
| S2 | Width across flats [mm] | 27 mm |
| Cmin | Span outside pull-off (min.) [mm] | 0 mm |
| Cmax | Span outside pull-off (max.) [mm] | 120 mm |
| K | Hook root thickness at the tip (claw thickness K) [mm] | 3 mm |
| J | Hook base width (claw width J) [mm] | 20,5 mm |
| O | Hook base depth usable (claw depth usable O) [mm] | 15,5 mm |
| H | Total hook root depth (total claw depth H) [mm] | 31 mm |
| L | Total claw thickness (L+1mm) [mm]: (claw distance to base surface) | 10 mm |
| Emin | Span inside pull-out (min.) [mm] | 70 mm |
| Emax | Span inside pull-out (max.) [mm] | 180 mm |
| Tmax | Max. torque [Nm] | 80 Nm |
| Fmax | Max. tractive force [t] | 4.5 t |
| Fmax | Max. tensile force [kN] | 45 kN |

| Abbreviation | Attribut | Wert |
|---|---|---|
| X | Total width [mm] | 172 mm |
| Z | Total height [mm] | 183 mm |
| A | Clamping depth of external puller [mm] | 200 mm |
| S1 | Width across flats [mm] | 17 mm |
| S2 | Width across flats [mm] | 27 mm |
| Cmin | Span outside pull-off (min.) [mm] | 0 mm |
| Cmax | Span outside pull-off (max.) [mm] | 120 mm |
| K | Hook root thickness at the tip (claw thickness K) [mm] | 3 mm |
| J | Hook base width (claw width J) [mm] | 20,5 mm |
| O | Hook base depth usable (claw depth usable O) [mm] | 15,5 mm |
| H | Total hook root depth (total claw depth H) [mm] | 31 mm |
| L | Total claw thickness (L+1mm) [mm]: (claw distance to base surface) | 10 mm |
| Emin | Span inside pull-out (min.) [mm] | 70 mm |
| Emax | Span inside pull-out (max.) [mm] | 180 mm |
| Tmax | Max. torque [Nm] | 80 Nm |
| Fmax | Max. tractive force [t] | 4.5 t |
| Fmax | Max. tensile force [kN] | 45 kN |

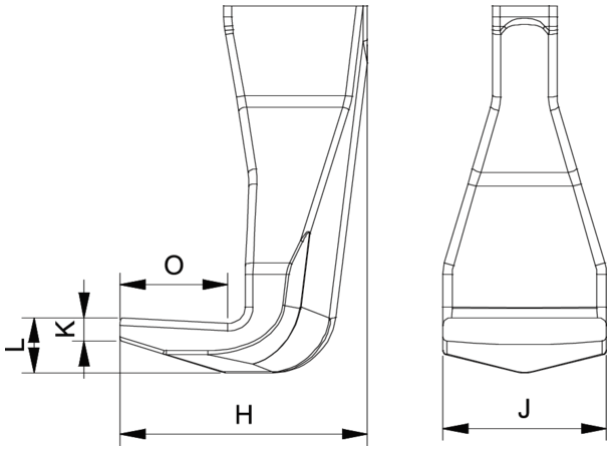


| Abbreviation | Attribut | Wert |
|---|---|---|
| X | Total width [mm] | 172 mm |
| Z | Total height [mm] | 183 mm |
| A | Clamping depth of external puller [mm] | 200 mm |

| | | |
|---|---|---|
| S1 | Width across flats [mm] | 17 mm |
| S2 | Width across flats [mm] | 27 mm |
| Cmin | Span outside pull-off (min.) [mm] | 0 mm |
| Cmax | Span outside pull-off (max.) [mm] | 120 mm |
| K | Hook root thickness at the tip (claw thickness K) [mm] | 3 mm |
| J | Hook base width (claw width J) [mm] | 20,5 mm |
| O | Hook base depth usable (claw depth usable O) [mm] | 15,5 mm |
| H | Total hook root depth (total claw depth H) [mm] | 31 mm |
| L | Total claw thickness (L+1mm) [mm]: (claw distance to base surface) | 10 mm |
| Emin | Span inside pull-out (min.) [mm] | 70 mm |
| Emax | Span inside pull-out (max.) [mm] | 180 mm |
| Tmax | Max. torque [Nm] | 80 Nm |
| Fmax | Max. tractive force [t] | 4.5 t |
| Fmax | Max. tensile force [kN] | 45 kN |

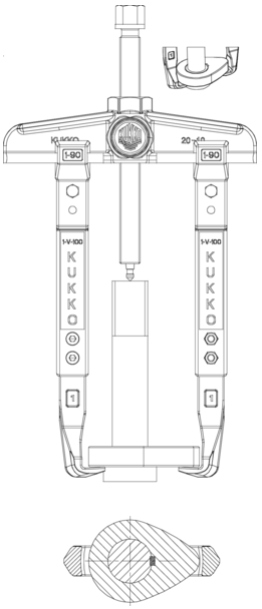

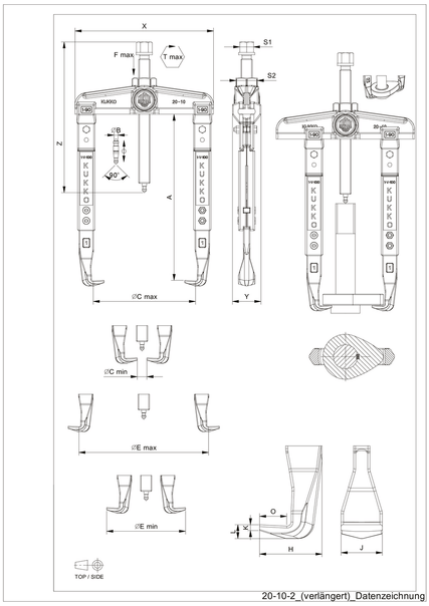

20-10-2_(verlängert)_Datenzeichnung

| Abbreviation | Attribut | Wert |
|---|---|---|
| X | Total width [mm] | 172 mm |
| Z | Total height [mm] | 183 mm |
| A | Clamping depth of external puller [mm] | 200 mm |
| S1 | Width across flats [mm] | 17 mm |
| S2 | Width across flats [mm] | 27 mm |
| Cmin | Span outside pull-off (min.) [mm] | 0 mm |
| Cmax | Span outside pull-off (max.) [mm] | 120 mm |
| K | Hook root thickness at the tip (claw thickness K) [mm] | 3 mm |
| J | Hook base width (claw width J) [mm] | 20,5 mm |
| O | Hook base depth usable (claw depth usable O) [mm] | 15,5 mm |
| H | Total hook root depth (total claw depth H) [mm] | 31 mm |
| L | Total claw thickness (L+1mm) [mm]: (claw distance to base surface) | 10 mm |
| Emin | Span inside pull-out (min.) [mm] | 70 mm |
| Emax | Span inside pull-out (max.) [mm] | 180 mm |


| Abbreviation | Attribut | Wert |
|---|---|---|
| X | Total width [mm] | 172 mm |
| Z | Total height [mm] | 183 mm |
| A | Clamping depth of external puller [mm] | 200 mm |
| S1 | Width across flats [mm] | 17 mm |
| S2 | Width across flats [mm] | 27 mm |
| Cmin | Span outside pull-off (min.) [mm] | 0 mm |
| Cmax | Span outside pull-off (max.) [mm] | 120 mm |
| K | Hook root thickness at the tip (claw thickness K) [mm] | 3 mm |
| J | Hook base width (claw width J) [mm] | 20,5 mm |
| O | Hook base depth usable (claw depth usable O) [mm] | 15,5 mm |
| H | Total hook root depth (total claw depth H) [mm] | 31 mm |
| L | Total claw thickness (L+1mm) [mm]: (claw distance to base surface) | 10 mm |
| Emin | Span inside pull-out (min.) [mm] | 70 mm |
| Emax | Span inside pull-out (max.) [mm] | 180 mm |

| | | |
|---|---|---|
| Tmax | Max. torque [Nm] | 80 Nm |
| Fmax | Max. tractive force [t] | 4.5 t |
| Fmax | Max. tensile force [kN] | 45 kN |