112-1 2-jaw puller for rolling bearings (Swedish model) with cone knob, up to 55 mm spread, 45 mm reach



DESCRIPTION

The 2-jaw Pullers with cone knob of series 112 have been developed in collaboration with a Scandinavian ball bearing manufacturer for the proper removal of rolling bearings. Both the proportions of the Pullers and the consistently straight jaws are specifically tailored to the requirements for centric pulling of small and medium-sized bearings amid limited surrounding conditions. This counteracts potential damage to the bearing and bearing seat during removal. The springs ensure synchronous opening and closing of the jaws, enabling easier handling and even more efficient work. The combination of a tightened reach adjusting knob and spring element prevents the Puller from slipping off, ensuring an especially firm hold at all times. At the same time, the fixation of the jaws by the cone knob speeds up and simplifies the task during consistent pulling operations with identical spread.

APPLICATION AREA

For the central removal of small and medium bearings.

BENEFIT

- Automatic self-centering of the jaws by tightening the tension ring
- The tension ring and spring ensure a force-fitting fixation of the puller without slipping or deflection of the jaws.
- Claw-shaped leg end grasps the bearing in a form-fit manner.
- The spread only needs to be set once for identical pull-off processes.
- Anti-slip safety (spindle neck) at the spindle head for safe working with a wrench.
- Secure mounting of the spindle through the rotatable spindle tip on both smooth surfaces and in centering (Switch Technology)
- Spindle extension for the protection of the thread

OPERATION

- Place the spindle in the center on the shaft
- Tighten the cone knob until the arms securely clamp the bearing
- Manually apply pressure to the spindle for fixation
- Move the hexagon on the spindle head with a ratchet or a combination wrench until the bearing is loose

APPLICATION IMAGE



MASTER DATA

GTIN [GTIN]	4021176418143
Country of origin	DE
Material	Tool steel
Series	112
Gross weight [kg]	0,405 kg
Package contents	1 piece
Packaging Act	PAPPE PAP 21
Worldwide sales capability	Yes (REACH, RoHS, POP, PROP65, TSCA)

SPARE PARTS

- 112-1-33_clamping ring
- 112-1-45-P_2 puller with tension pins (pair)
- 112-1-T_Crossbar
- 610110_Mechanical pressure spindle

2-jaw puller for rolling bearings (Swedish model) with cone knob, up to 55 mm spread, 45 mm reach

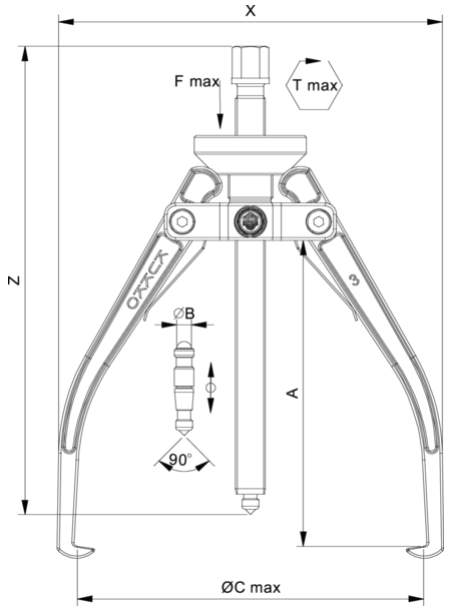

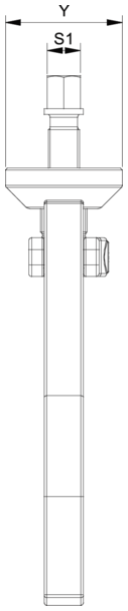

Abbreviation	Attribut	Wert
X	Total width [mm]	65 mm
Y	Total depth [mm]	40 mm
Z	Total height [mm]	75 mm
A	Clamping depth of external puller [mm]	45 mm
S1	Width across flats [mm]	13 mm
Cmin	Span outside pull-off (min.) [mm]	0 mm
Cmax	Span outside pull-off (max.) [mm]	55 mm
K	Hook root thickness at the tip (claw thickness K) [mm]	3 mm
J	Hook base width (claw width J) [mm]	10 mm
O	Hook base depth usable (claw depth usable O) [mm]	7 mm
H	Total hook root depth (total claw depth H) [mm]	12 mm
L	Total claw thickness (L+1mm) [mm]: (claw distance to base surface)	5 mm
Tmax	Max. torque [Nm]	25 Nm
Fmax	Max. tractive force [t]	1.5 t
Fmax	Max. tensile force [kN]	15 kN

Abbreviation	Attribut	Wert
X	Total width [mm]	65 mm
Y	Total depth [mm]	40 mm
Z	Total height [mm]	75 mm
A	Clamping depth of external puller [mm]	45 mm
S1	Width across flats [mm]	13 mm
Cmin	Span outside pull-off (min.) [mm]	0 mm
Cmax	Span outside pull-off (max.) [mm]	55 mm
K	Hook root thickness at the tip (claw thickness K) [mm]	3 mm
J	Hook base width (claw width J) [mm]	10 mm
O	Hook base depth usable (claw depth usable O) [mm]	7 mm
H	Total hook root depth (total claw depth H) [mm]	12 mm
L	Total claw thickness (L+1mm) [mm]: (claw distance to base surface)	5 mm
Tmax	Max. torque [Nm]	25 Nm
Fmax	Max. tractive force [t]	1.5 t
Fmax	Max. tensile force [kN]	15 kN

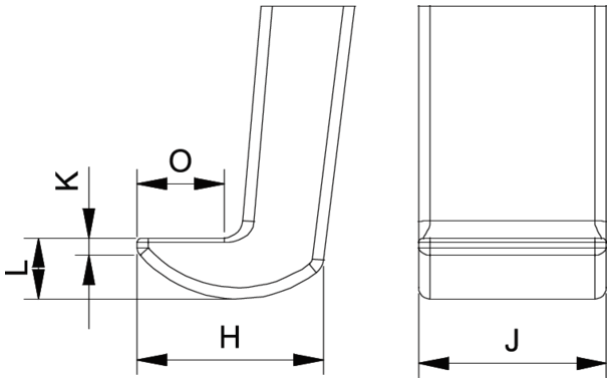

Abbreviation	Attribut	Wert
X	Total width [mm]	65 mm
Y	Total depth [mm]	40 mm
Z	Total height [mm]	75 mm
A	Clamping depth of external puller [mm]	45 mm
S1	Width across flats [mm]	13 mm
Cmin	Span outside pull-off (min.) [mm]	0 mm
Cmax	Span outside pull-off (max.) [mm]	55 mm
K	Hook root thickness at the tip (claw thickness K) [mm]	3 mm

J	Hook base width (claw width J) [mm]	10 mm
O	Hook base depth usable (claw depth usable O) [mm]	7 mm
H	Total hook root depth (total claw depth H) [mm]	12 mm
L	Total claw thickness (L+1mm) [mm]: (claw distance to base surface)	5 mm
Tmax	Max. torque [Nm]	25 Nm
Fmax	Max. tractive force [t]	1.5 t
Fmax	Max. tensile force [kN]	15 kN