223 Puller for parts with threaded holes, with 250 mm impact stroke, 1 kg kg impact weight



DESCRIPTION

The pullers of series 223 are used for pulling parts with concentric threaded holes in crafts, industry, and workshops. The sliding hammer is capable of this together with the thread adapters. The ergonomically shaped, solid sliding piece allows the applied force to be optimally transmitted and a strong shock effect to be achieved. This also ensures a contactless and gentle extraction.

APPLICATION AREA

For removing parts with concentric threaded holes in crafts, industry, and workshops.

BENEFIT

- The thread adapters enable the careful and safe removal of parts with threaded holes.
- Using the dimensions laser-etched on the thread adapters, the thread can be uniquely identified.
- The shape of the sliding piece allows for a high impact weight of the sliding hammer with simple application.
- The internal stop point prevents crushing and ensures a safe working process.

OPERATION

- Identify threads by applying the thread adapter and choose the appropriate adapter
- Insert the thread adapter into the threaded hole and mount the sliding hammer rod
- Use the sliding hammer with a striking motion to pull the part out

MASTER DATA

GTIN [GTIN]	4021176309083
Country of origin	DE
Material	Tool steel
Series	223
Gross weight [kg]	1,635 kg
Package contents	1 piece
Packaging Act	PAPPE PAP 21
Worldwide sales capability	Yes (REACH, RoHS, POP, PROP65, TSCA)

APPLICATION IMAGE



DETAIL IMAGE



SPARE PARTS

- 223-GH_Sliding Hammer Device
- GE10-10_spindle insert
- GE12-10 spindle insert
- GE14-10_Spindle insert
- GE16-10_spindle insert
- GE18-10_Spindle insert
- GE3-10_spindle insert
- GE4-10_spindle insert
- GE5-10_spindle insert
- GE6-10_spindle insert
- GE8-10_Spindle Insert
- KS-22-01-GH_Sliding Hammer Device for Ks-22-01
- VM12-10_connecting nut

Puller for parts with threaded holes, with 250 mm impact stroke, 1 kg kg impact weight

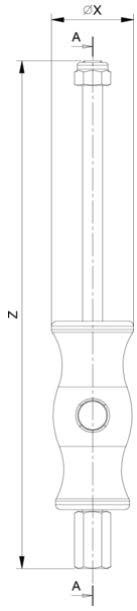

Abbreviation	Attribut	Wert
X	Diameter [mm]	50 mm
S2	Width across flats Thread adapter [mm]	10 mm
Z	Total length [mm]	300 mm
S1	Width across flats stop nut [mm]	19 mm
T3	Female thread of connecting nut [mm]	M10
A	Impact distance [mm]	250 mm
S1	Width across flats connecting nut [mm]	19 mm
T2	Insert thread	M3, M4, M5, M6, M8, M10, M12, M14, M16, M18

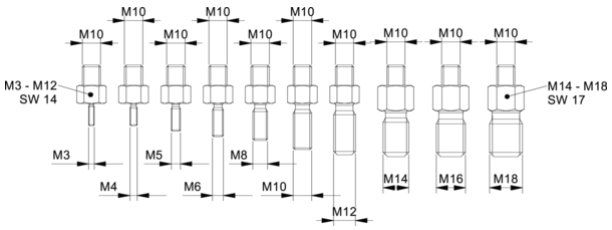

Abbreviation	Attribut	Wert
X	Diameter [mm]	50 mm
S2	Width across flats Thread adapter [mm]	10 mm
Z	Total length [mm]	300 mm
S1	Width across flats stop nut [mm]	19 mm
T3	Female thread of connecting nut [mm]	M10
A	Impact distance [mm]	250 mm
S1	Width across flats connecting nut [mm]	19 mm
T2	Insert thread	M3, M4, M5, M6, M8, M10, M12, M14, M16, M18

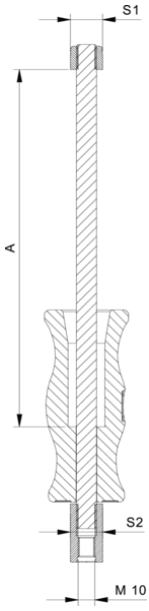

Abbreviation	Attribut	Wert
X	Diameter [mm]	50 mm
S2	Width across flats Thread adapter [mm]	10 mm
Z	Total length [mm]	300 mm
S1	Width across flats stop nut [mm]	19 mm
T3	Female thread of connecting nut [mm]	M10
A	Impact distance [mm]	250 mm
S1	Width across flats connecting nut [mm]	19 mm
T2	Insert thread	M3, M4, M5, M6, M8, M10, M12, M14, M16, M18

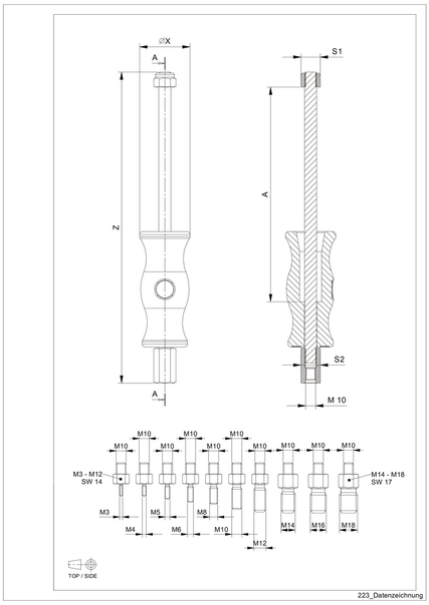

Abbreviation	Attribut	Wert
X	Diameter [mm]	50 mm
S2	Width across flats Thread adapter [mm]	10 mm
Z	Total length [mm]	300 mm
S1	Width across flats stop nut [mm]	19 mm

T3	Female thread of connecting nut [mm]	M10
A	Impact distance [mm]	250 mm
S1	Width across flats connecting nut [mm]	19 mm
T2	Insert thread	M3, M4, M5, M6, M8, M10, M12, M14, M16, M18