15-00 Pulling device with separation diameter 6 mm - 40 mm, 12,5 mm usable cutting depth (mounting thread M6)



DESCRIPTION

The pulling devices of series 15 are used together with the pullers of series 18 for pulling ball bearings, roller bearings, inner rings, and other flat-seated parts in trades, industry, and workshops when there is not enough space for jaws. The separation-pulling process is able to first separate those parts gently before they can be pulled from the outside.

APPLICATION AREA

Together with the pullers of series 18 for removing ball bearings, roller bearings, inner rings, and other flat-lying components in craft, industry, and workshop.

BENEFIT

- The sharp edges allow for extraction where other extraction methods are not applicable.
- By screwing together the separation and pulling device, the highest stability during pulling is ensured.
- If the separating jaws are screwed into the pulling device the other way around, the support area is enlarged and removed more gently.

OPERATION

- Press the sharp cutting edges of the pulling device behind the part
- Using the pressure spindle, clamp the separating jaws by evenly tightening the adjusting nuts on the side bolts of the pulling device and make sure that the separating knives sit to the stop under the part to be pulled off
- Screw the side screws of the puller into the threaded holes of the pulling device to the stop
- Hold the pulling device and pull off the part safely and carefully by tightening the clamping nut

MASTER DATA

GTIN [GTIN]	4021176101854
Country of origin	DE
Material	Tool steel
Series	15
Gross weight [kg]	0,23 kg
Package contents	1 piece
Packaging Act	Rezykkat rHDPE 61
Worldwide sales capability	Yes (REACH, RoHS, POP, PROP65, TSCA)

APPLICATION IMAGE



SUITABLE FOR

- 18-00_Extractor device
- 68-0_Universal Puller

SPARE PARTS

- 015091_side bolt with nut

Pulling device with separation diameter 6 mm - 40 mm, 12,5 mm usable cutting depth (mounting thread M6)

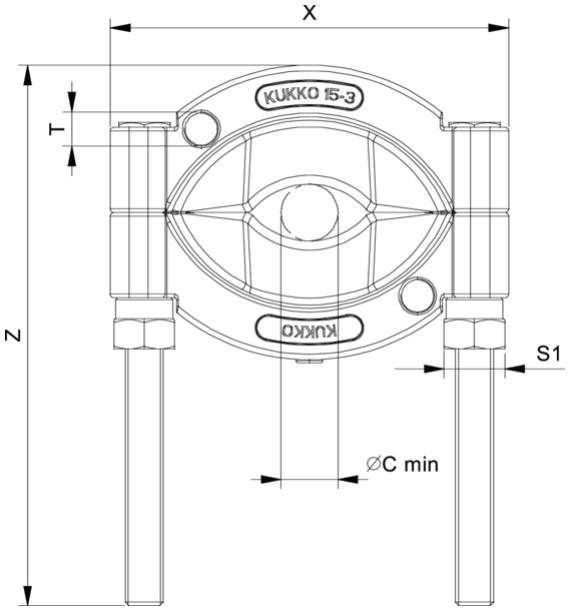

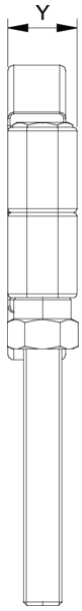

Abbreviation	Attribut	Wert
X	Total width [mm]	72,5 mm
Y	Total depth [mm]	15,5 mm
Z	Total height [mm]	105 mm
S1	Width across flats [mm]	10 mm
Cmin	Cut-off diameter (min.) [mm]	6 mm
Cmax	Separating diameter (max.) [mm]	40 mm
K	Cutting edge thickness at the tip [mm]	0,2 mm
O	Usable snow depth [mm]	12,5 mm
H	Total cutting edge height [mm]	24,5 mm
L	Rear cutting edge thickness [mm]	3,3 mm
T1	Mounting thread for tension bolt [mm]	M6

Abbreviation	Attribut	Wert
X	Total width [mm]	72,5 mm
Y	Total depth [mm]	15,5 mm
Z	Total height [mm]	105 mm
S1	Width across flats [mm]	10 mm
Cmin	Cut-off diameter (min.) [mm]	6 mm
Cmax	Separating diameter (max.) [mm]	40 mm
K	Cutting edge thickness at the tip [mm]	0,2 mm
O	Usable snow depth [mm]	12,5 mm
H	Total cutting edge height [mm]	24,5 mm
L	Rear cutting edge thickness [mm]	3,3 mm
T1	Mounting thread for tension bolt [mm]	M6

A-A

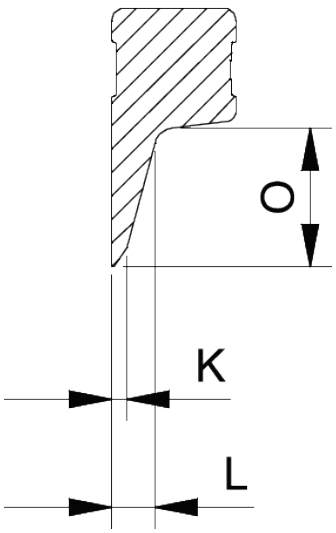

Abbreviation	Attribut	Wert
X	Total width [mm]	72,5 mm
Y	Total depth [mm]	15,5 mm

Z	Total height [mm]	105 mm
S1	Width across flats [mm]	10 mm
Cmin	Cut-off diameter (min.) [mm]	6 mm
Cmax	Separating diameter (max.) [mm]	40 mm
K	Cutting edge thickness at the tip [mm]	0,2 mm
O	Usable snow depth [mm]	12,5 mm
H	Total cutting edge height [mm]	24,5 mm
L	Rear cutting edge thickness [mm]	3,3 mm
T1	Mounting thread for tension bolt [mm]	M6