20-1-S-T 2-jaw universal puller with extremely narrow jaws, up to 90 mm spread, 100 mm reach



APPLICATION IMAGE



DESCRIPTION

The 2-jaw universal puller with extremely narrow jaws and trapezoidal support surface on the claw is used for the safe removal of transmission gears, bearings, sprockets, synchronizer bodies, and similar components. This allows for the loosening of any component that is seated on a shaft and is accessible from the outside. The special design of the jaws ensures that even very tight and poorly accessible gaps can be reached.

APPLICATION AREA

To safely extract gear wheels, bearings, sprockets, synchronizers, and similar components.

BENEFIT

- The extremely slim design of the jaws is optimal for tight and hard-to-reach places.
- The screw connection allows for easy loosening and particularly tight fastening of the jaws with an allen key.
- Application also for eccentric components via freely movable pulling jaws gliding on the crossbar.
- Hexagonal profile on the crossbar for secure counterholding
- Variable adjustment to any span between 16 mm – 90 mm
- Shear-proof mounting of the claw in the sliding piece (Armlock Technology)
- Secure installation of the spindle with rotatable spindle tip on both smooth surfaces and in centering (Switch Technology)
- Optional convertible from an external puller to an internal puller by reversing the jaws.
- Anti-slip safety (spindle neck) at the spindle head for safe work with the wrench
- Spindle outlet to protect the thread
- Jaws, spindle, and crossbar have a spare part number for easy reordering.
- Pullers are labeled with technical attributes and manufacturer information (label)

OPERATION

- Place the pulling jaws externally onto the part to be removed
- Slide the claws under the component
- Use a wrench to secure the jaws
- Pull the spindle manually under pressure to fix it
- Move the hexagon at the spindle head with a ratchet or open-end wrench until the component is loosened

MASTER DATA

GTIN [GTIN]	4021176321641
Country of origin	DE
Material	Tool steel
Series	20-S-T
Gross weight [kg]	1,18 kg
Package contents	1 piece
Packaging Act	PAPPE PAP 21
Worldwide sales capability	Yes (REACH, RoHS, POP, PROP65, TSCA)

SPARE PARTS

- 1-94-P_Extremely narrow pulling hooks (Pair)
- 20-1-T_Crossbar for 20-1
- 614160_Mechanical pressure spindle

2-jaw universal puller with extremely narrow jaws, up to 90 mm spread, 100 mm reach

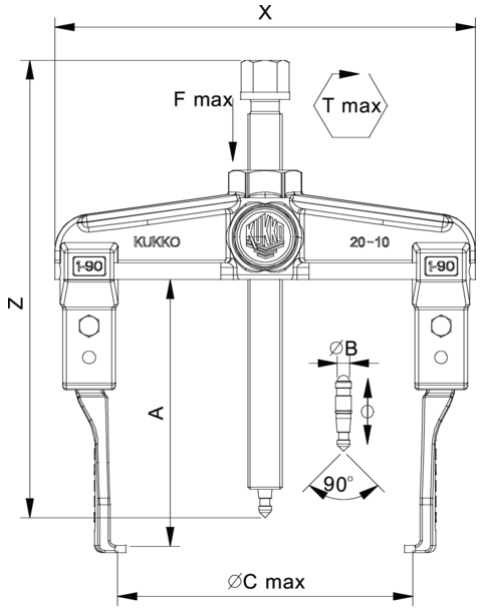

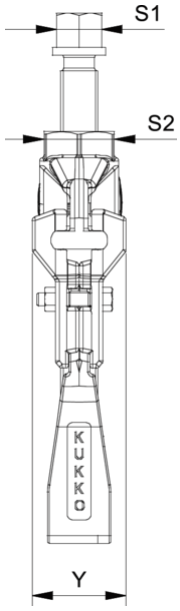

Abbreviation	Attribut	Wert
X	Total width [mm]	136 mm
Y	Total depth [mm]	37 mm
Z	Total height [mm]	183 mm
A	Clamping depth of external puller [mm]	100 mm
S1	Width across flats [mm]	17 mm
S2	Width across flats [mm]	27 mm
Cmin	Span outside pull-off (min.) [mm]	16 mm
Cmax	Span outside pull-off (max.) [mm]	90 mm
K	Hook root thickness at the tip (claw thickness K) [mm]	3 mm
J	Hook base width (claw width J) [mm]	24 mm
O	Hook base depth usable (claw depth usable O) [mm]	7 mm
H	Total hook root depth (total claw depth H) [mm]	14 mm
L	Total claw thickness (L+1mm) [mm]: (claw distance to base surface)	3 mm
Emin	Span inside pull-out (min.) [mm]	70 mm
Emax	Span inside pull-out (max.) [mm]	140 mm
Tmax	Max. torque [Nm]	35 Nm
Fmax	Max. tractive force [t]	2.5 t
Fmax	Max. tensile force [kN]	25 kN

Abbreviation	Attribut	Wert
X	Total width [mm]	136 mm
Y	Total depth [mm]	37 mm
Z	Total height [mm]	183 mm
A	Clamping depth of external puller [mm]	100 mm
S1	Width across flats [mm]	17 mm
S2	Width across flats [mm]	27 mm
Cmin	Span outside pull-off (min.) [mm]	16 mm
Cmax	Span outside pull-off (max.) [mm]	90 mm
K	Hook root thickness at the tip (claw thickness K) [mm]	3 mm
J	Hook base width (claw width J) [mm]	24 mm
O	Hook base depth usable (claw depth usable O) [mm]	7 mm
H	Total hook root depth (total claw depth H) [mm]	14 mm
L	Total claw thickness (L+1mm) [mm]: (claw distance to base surface)	3 mm
Emin	Span inside pull-out (min.) [mm]	70 mm
Emax	Span inside pull-out (max.) [mm]	140 mm
Tmax	Max. torque [Nm]	35 Nm
Fmax	Max. tractive force [t]	2.5 t
Fmax	Max. tensile force [kN]	25 kN

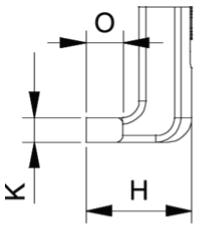

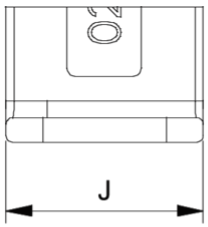

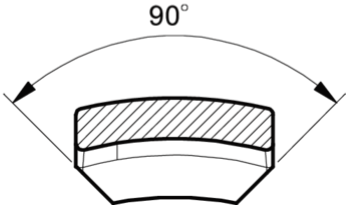

Abbreviation	Attribut	Wert

X	Total width [mm]	136 mm
Y	Total depth [mm]	37 mm
Z	Total height [mm]	183 mm
A	Clamping depth of external puller [mm]	100 mm
S1	Width across flats [mm]	17 mm
S2	Width across flats [mm]	27 mm
Cmin	Span outside pull-off (min.) [mm]	16 mm
Cmax	Span outside pull-off (max.) [mm]	90 mm
K	Hook root thickness at the tip (claw thickness K) [mm]	3 mm
J	Hook base width (claw width J) [mm]	24 mm
O	Hook base depth usable (claw depth usable O) [mm]	7 mm
H	Total hook root depth (total claw depth H) [mm]	14 mm
L	Total claw thickness (L+1mm) [mm]: (claw distance to base surface)	3 mm
Emin	Span inside pull-out (min.) [mm]	70 mm
Emax	Span inside pull-out (max.) [mm]	140 mm
Tmax	Max. torque [Nm]	35 Nm
Fmax	Max. tractive force [t]	2.5 t
Fmax	Max. tensile force [kN]	25 kN

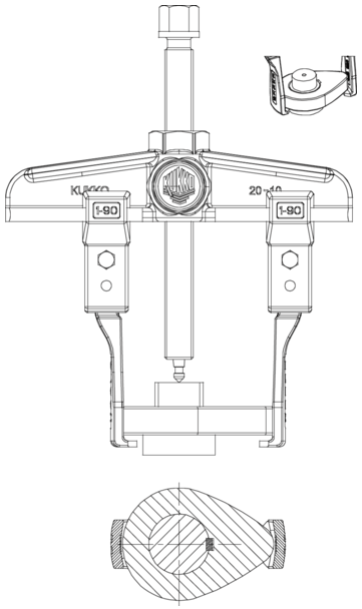

Abbreviation	Attribut	Wert
X	Total width [mm]	136 mm
Y	Total depth [mm]	37 mm
Z	Total height [mm]	183 mm
A	Clamping depth of external puller [mm]	100 mm
S1	Width across flats [mm]	17 mm
S2	Width across flats [mm]	27 mm
Cmin	Span outside pull-off (min.) [mm]	16 mm
Cmax	Span outside pull-off (max.) [mm]	90 mm
K	Hook root thickness at the tip (claw thickness K) [mm]	3 mm
J	Hook base width (claw width J) [mm]	24 mm
O	Hook base depth usable (claw depth usable O) [mm]	7 mm
H	Total hook root depth (total claw depth H) [mm]	14 mm
L	Total claw thickness (L+1mm) [mm]: (claw distance to base surface)	3 mm
Emin	Span inside pull-out (min.) [mm]	70 mm
Emax	Span inside pull-out (max.) [mm]	140 mm
Tmax	Max. torque [Nm]	35 Nm
Fmax	Max. tractive force [t]	2.5 t
Fmax	Max. tensile force [kN]	25 kN