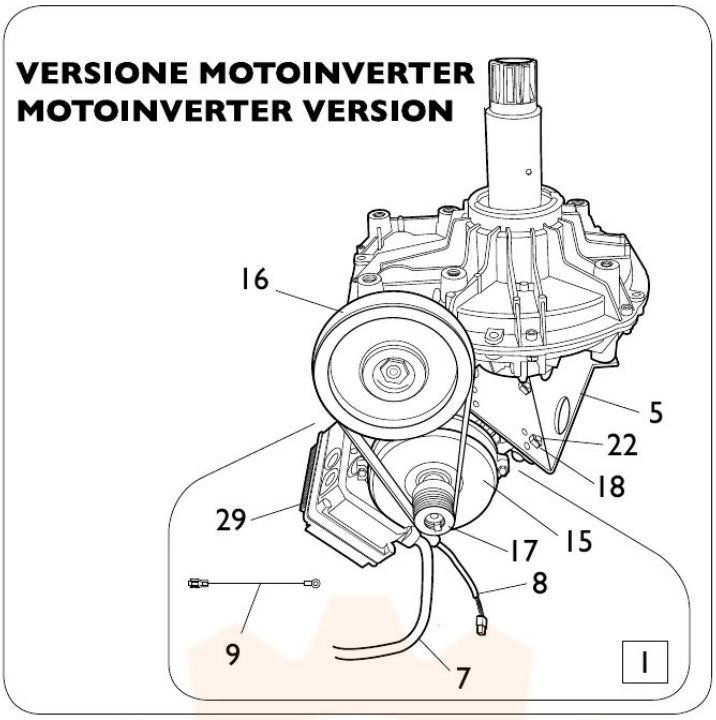
VERSIONE MOTOINVERTER
MOTOINVERTER VERSION
16
5
22
18
29
15
17
8
9
7
1

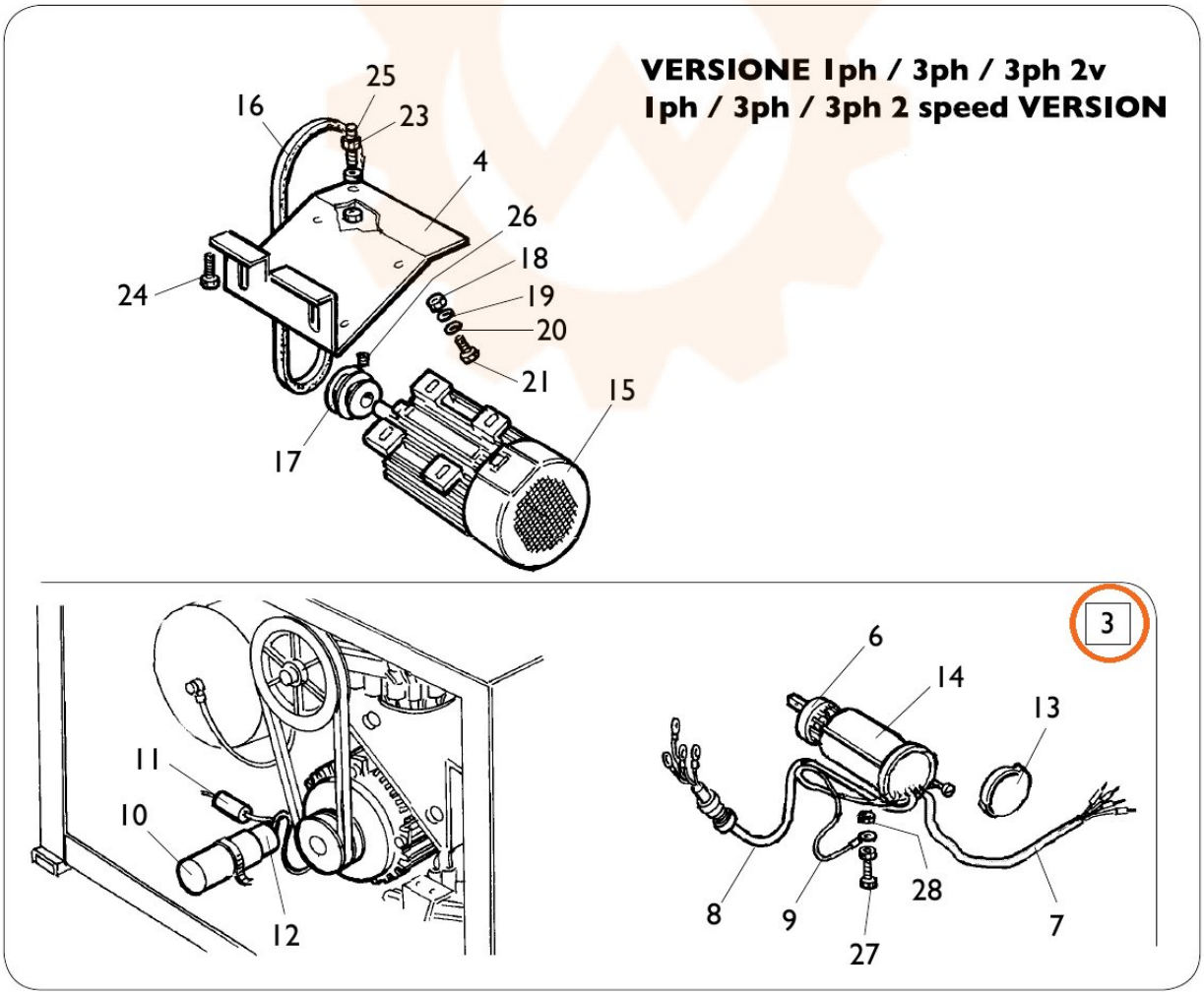
VERSIONE 1ph / 3ph / 3ph 2v
1ph / 3ph / 3ph 2 speed VERSION
25
16
23
4
26
18
24
19
20
21
15
17
3
6
14
13
11
10
28
8
9
7
27
12