D-koppeling G1/4 T6 | Mondolfo Ferro 3-00460

Mondolfo Ferro Aquila AS 905 · 2020 · Tekening 14 · positie 9

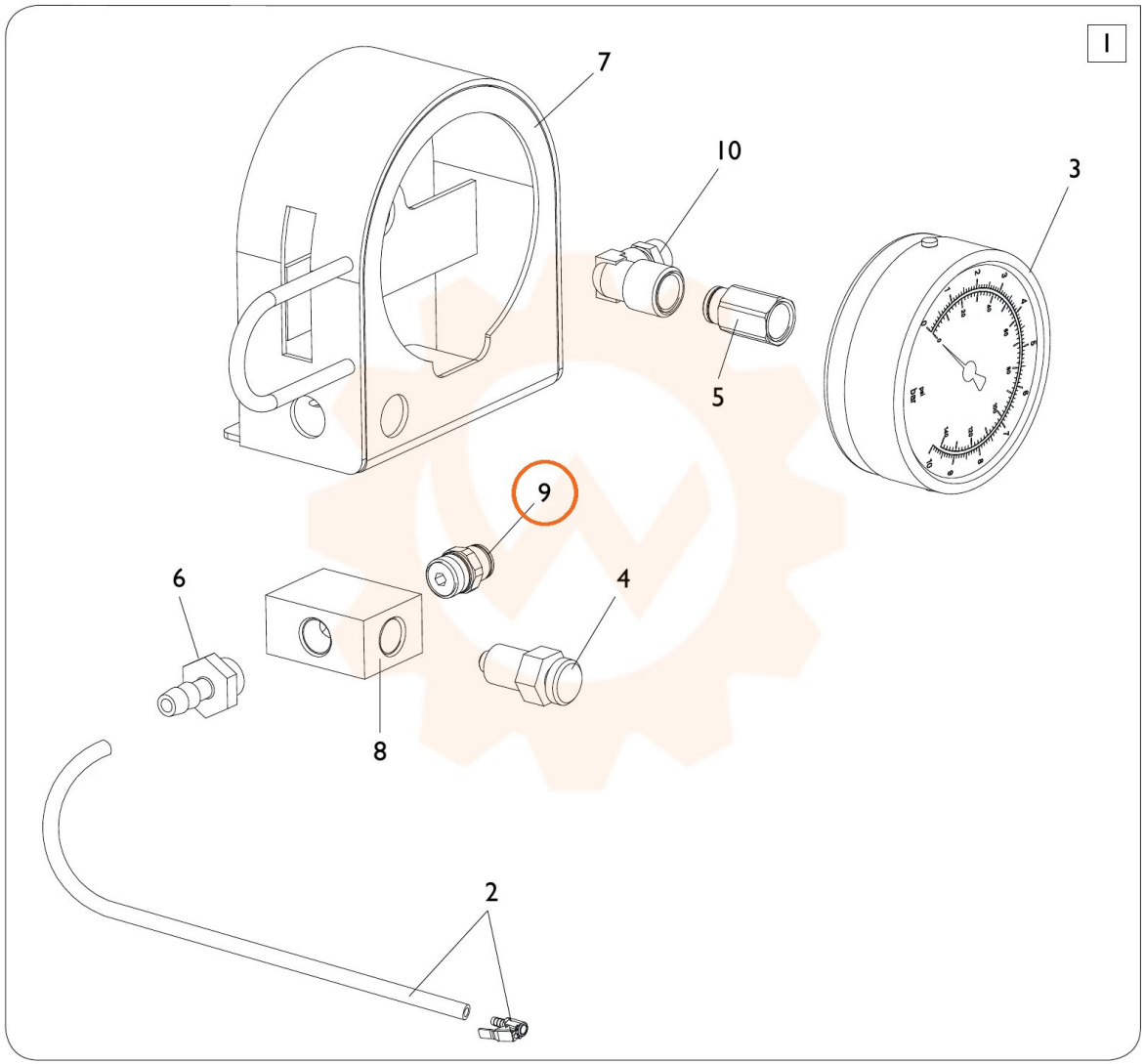
I
7
10
3
5
9
6
4
8
2