482-5 2-jaw pullers with force-amplifying, self-centering, clamping jaws, up to 250 mm spread, 250 mm reach



DESCRIPTION

The handy 2-jaw puller with force-amplifying, self-centering and tensioning jaws is used for pulling bearings, gears and discs in tight and hard-to-reach gaps. This makes it possible to loosen any component that sits on a shaft and is freely accessible from the outside. Thanks to the integrated force-amplifying spring mechanism, the clamping force increases proportionally to the pulling force. By tightening the spindle, the jaws are automatically centered. The freely movable pin on the T-handle ensures comfortable one-handed tightening of the spindle in the tightest spaces.

APPLICATION AREA

To remove bearings, gears, and discs for tight and hard-to-reach spaces.

BENEFIT

- Self-centering of the jaws through manual tightening of the spindle (Autogrip Technology)
- An integrated, free-moving pen at the T-handle ensures manual spindle drive in the tightest spaces.
- The slim design of the jaws allows access to poorly accessible areas.
- The thread design allows for a quick tightening of the spindle, as fewer rotations are required.
- Hexagon on the spindle is suitable for operation with powered tools.

OPERATION

- Place the puller jaws from the outside against the part to be removed
- Pivot the claws under the component
- Manually pull the spindle for fixation
- Start the T-handle on the spindle head until the component is released

MASTER DATA

GTIN [GTIN]	4021176480171
Country of origin	DE
Material	Tool steel
Series	482
Gross weight [kg]	1,92 kg
Package contents	1 piece
Packaging Act	PAPPE PAP 21
Worldwide sales capability	Yes (REACH, RoHS, POP, PROP65, TSCA)

SPARE PARTS

- 482-4-T_Crossbar
- 482-5-206_pressure spindle
- 482-5-250-P_2 jaws (pair)

APPLICATION IMAGE

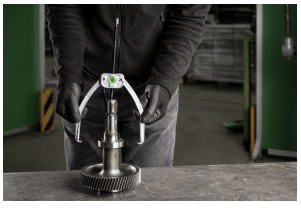

2-jaw pullers with force-amplifying, self-centering, clamping jaws, up to 250 mm spread, 250 mm reach

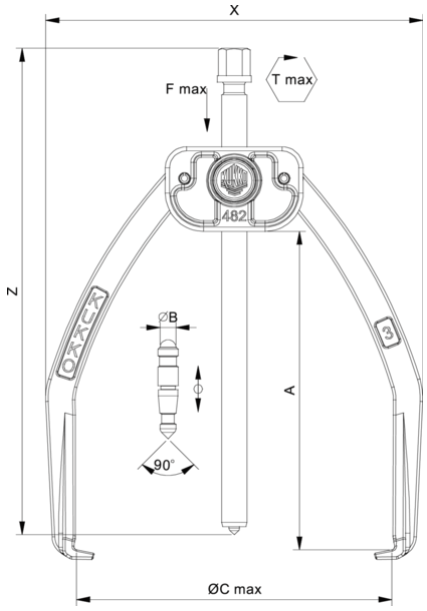

Abbreviation	Attribut	Wert
X	Total width [mm]	280 mm
Y	Total depth [mm]	33 mm
Z	Total height [mm]	350 mm
A	Clamping depth of external puller [mm]	250 mm
S1	Width across flats [mm]	17 mm
Cmin	Span outside pull-off (min.) [mm]	0 mm
Cmax	Span outside pull-off (max.) [mm]	250 mm
K	Hook root thickness at the tip (claw thickness K) [mm]	3,5 mm
J	Hook base width (claw width J) [mm]	16 mm
O	Hook base depth usable (claw depth usable O) [mm]	12 mm
H	Total hook root depth (total claw depth H) [mm]	27 mm
L	Total claw thickness (L+1mm) [mm]: (claw distance to base surface)	8 mm
Tmax	Max. torque [Nm]	40 Nm
Fmax	Max. tractive force [t]	3 t
Fmax	Max. tensile force [kN]	30 kN

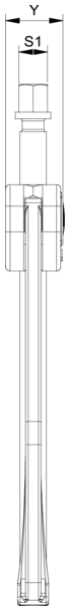

Abbreviation	Attribut	Wert
X	Total width [mm]	280 mm
Y	Total depth [mm]	33 mm
Z	Total height [mm]	350 mm
A	Clamping depth of external puller [mm]	250 mm
S1	Width across flats [mm]	17 mm
Cmin	Span outside pull-off (min.) [mm]	0 mm
Cmax	Span outside pull-off (max.) [mm]	250 mm
K	Hook root thickness at the tip (claw thickness K) [mm]	3,5 mm
J	Hook base width (claw width J) [mm]	16 mm
O	Hook base depth usable (claw depth usable O) [mm]	12 mm
H	Total hook root depth (total claw depth H) [mm]	27 mm
L	Total claw thickness (L+1mm) [mm]: (claw distance to base surface)	8 mm
Tmax	Max. torque [Nm]	40 Nm
Fmax	Max. tractive force [t]	3 t
Fmax	Max. tensile force [kN]	30 kN

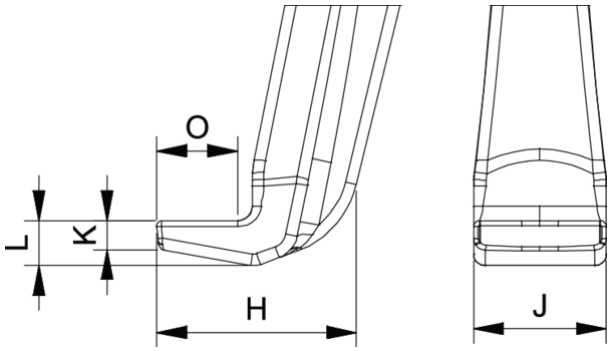

Abbreviation	Attribut	Wert
X	Total width [mm]	280 mm
Y	Total depth [mm]	33 mm
Z	Total height [mm]	350 mm
A	Clamping depth of external puller [mm]	250 mm
S1	Width across flats [mm]	17 mm
Cmin	Span outside pull-off (min.) [mm]	0 mm
Cmax	Span outside pull-off (max.) [mm]	250 mm
K	Hook root thickness at the tip (claw thickness K) [mm]	3,5 mm
J	Hook base width (claw width J) [mm]	16 mm

O	Hook base depth usable (claw depth usable O) [mm]	12 mm
H	Total hook root depth (total claw depth H) [mm]	27 mm
L	Total claw thickness (L+1mm) [mm]: (claw distance to base surface)	8 mm
Tmax	Max. torque [Nm]	40 Nm
Fmax	Max. tractive force [t]	3 t
Fmax	Max. tensile force [kN]	30 kN