Noodstopknop | Mondolfo Ferro 5-106239

Mondolfo Ferro Brm S-Box NG S2 · 2020 · Tekening 1 · positie 7

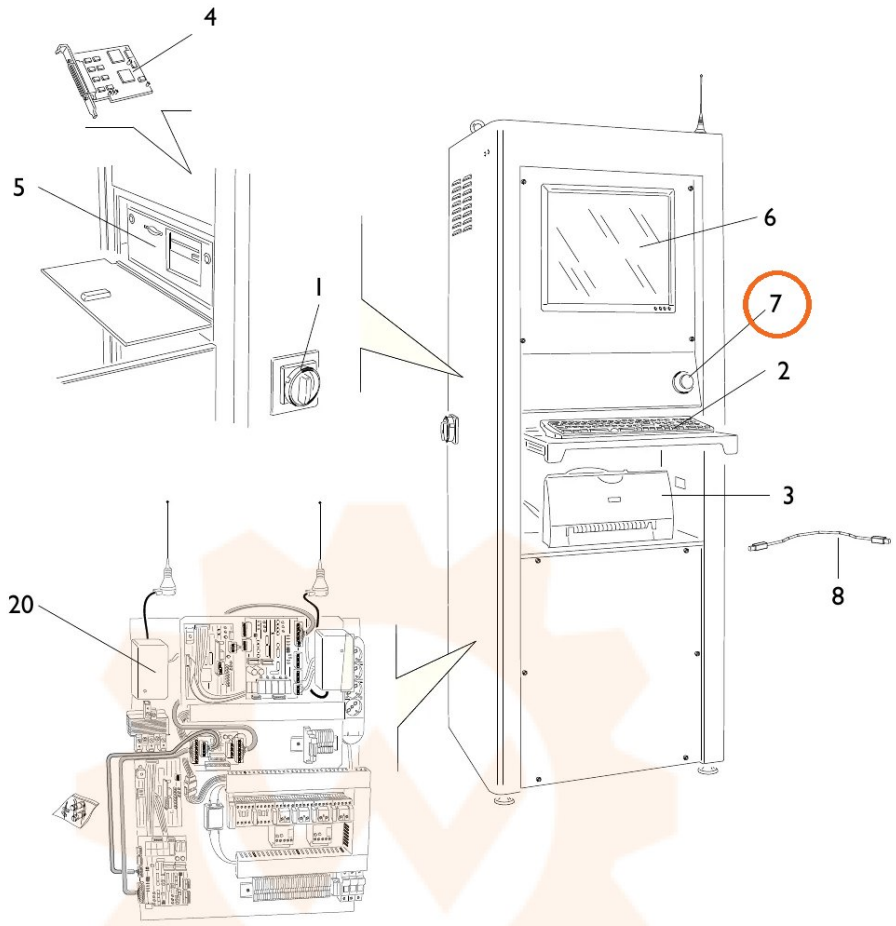

ACCESSORI
ACCESSORIES

