44-2 2-jaw industrial puller with force-amplifying, self-centering jaws, up to 120 mm spread, 120 mm reach



DESCRIPTION

The handy 2-jaw industrial puller with force-amplifying and self-centering jaws is used for pulling ball bearings, gears and discs in all common sizes for trade, workshop and industry. This allows any component to be released that sits on a shaft and is freely accessible from the outside. When the spindle pressure is applied, the part to be pulled is gripped ever more firmly by the interconnected jaws.

APPLICATION AREA

To detach bearings, gears, and discs in all common sizes for crafts, workshops, and industry.

BENEFIT

- Self-centering of the jaws through manual tightening of the spindle (Autogrip Technology)
- Safe setup of the spindle through a swiveling spindle tip on both smooth surfaces and during centering (Switch Technology)
- Spindle outlet to protect the thread

OPERATION

- Place the puller jaws from the outside onto the part to be removed
- Lift the jaws under the component
- Manually pull the spindle to secure it
- Use a ratchet or a ring spanner to move the hexagon on the spindle head until the component is loosened

MASTER DATA

GTIN [GTIN]	4021176016103
Country of origin	DE
Material	Tool steel
Series	44
Gross weight [kg]	1 kg
Package contents	1 piece
Packaging Act	PAPPE PAP 21
Worldwide sales capability	Yes (REACH, RoHS, POP, PROP65, TSCA)

APPLICATION IMAGE

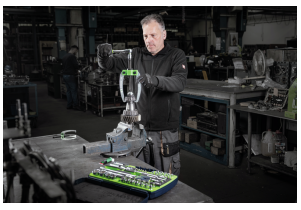

DETAIL IMAGE



SPARE PARTS

- 44-2-120-P_2 hooks (pair)
- 44-2-206_Spindle with socket
- 44-2-T_2-jaw crossbar
- 612140_Double-sided spindle tip
- 614160_Mechanical pressure spindle

2-jaw industrial puller with force-amplifying, self-centering jaws, up to 120 mm spread, 120 mm reach

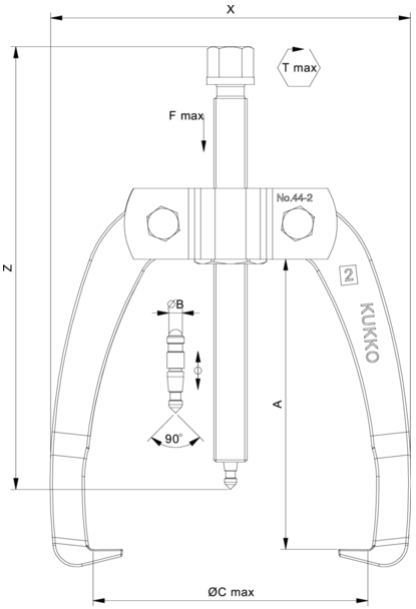

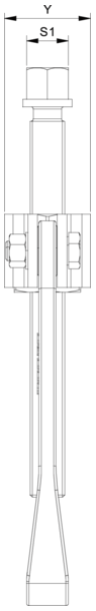

Abbreviation	Attribut	Wert
X	Total width [mm]	156 mm
Y	Total depth [mm]	35 mm
Z	Total height [mm]	181 mm
A	Clamping depth of external puller [mm]	120 mm
S1	Width across flats [mm]	17 mm
Cmin	Span outside pull-off (min.) [mm]	0 mm
Cmax	Span outside pull-off (max.) [mm]	120 mm
K	Hook root thickness at the tip (claw thickness K) [mm]	3 mm
J	Hook base width (claw width J) [mm]	17 mm
O	Hook base depth usable (claw depth usable O) [mm]	14 mm
H	Total hook root depth (total claw depth H) [mm]	32 mm
L	Total claw thickness (L+1mm) [mm]: (claw distance to base surface)	10 mm
Tmax	Max. torque [Nm]	85 Nm
Fmax	Max. tractive force [t]	5 t
Fmax	Max. tensile force [kN]	50 kN

Abbreviation	Attribut	Wert
X	Total width [mm]	156 mm
Y	Total depth [mm]	35 mm
Z	Total height [mm]	181 mm
A	Clamping depth of external puller [mm]	120 mm
S1	Width across flats [mm]	17 mm
Cmin	Span outside pull-off (min.) [mm]	0 mm
Cmax	Span outside pull-off (max.) [mm]	120 mm
K	Hook root thickness at the tip (claw thickness K) [mm]	3 mm
J	Hook base width (claw width J) [mm]	17 mm
O	Hook base depth usable (claw depth usable O) [mm]	14 mm
H	Total hook root depth (total claw depth H) [mm]	32 mm
L	Total claw thickness (L+1mm) [mm]: (claw distance to base surface)	10 mm
Tmax	Max. torque [Nm]	85 Nm
Fmax	Max. tractive force [t]	5 t
Fmax	Max. tensile force [kN]	50 kN

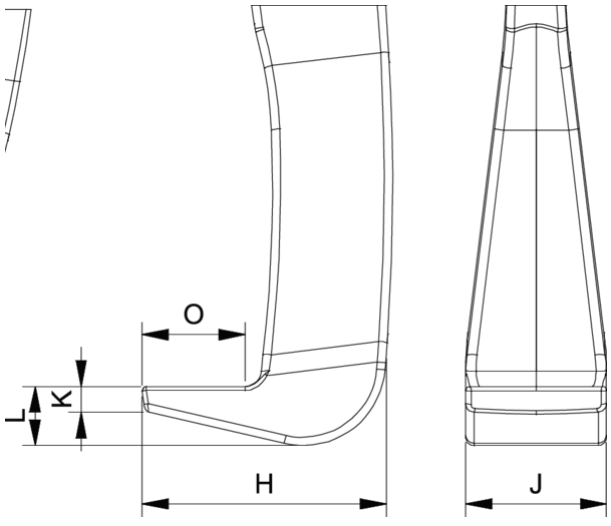

Abbreviation	Attribut	Wert
X	Total width [mm]	156 mm

Y	Total depth [mm]	35 mm
Z	Total height [mm]	181 mm
A	Clamping depth of external puller [mm]	120 mm
S1	Width across flats [mm]	17 mm
Cmin	Span outside pull-off (min.) [mm]	0 mm
Cmax	Span outside pull-off (max.) [mm]	120 mm
K	Hook root thickness at the tip (claw thickness K) [mm]	3 mm
J	Hook base width (claw width J) [mm]	17 mm
O	Hook base depth usable (claw depth usable O) [mm]	14 mm
H	Total hook root depth (total claw depth H) [mm]	32 mm
L	Total claw thickness (L+1mm) [mm]: (claw distance to base surface)	10 mm
Tmax	Max. torque [Nm]	85 Nm
Fmax	Max. tractive force [t]	5 t
Fmax	Max. tensile force [kN]	50 kN

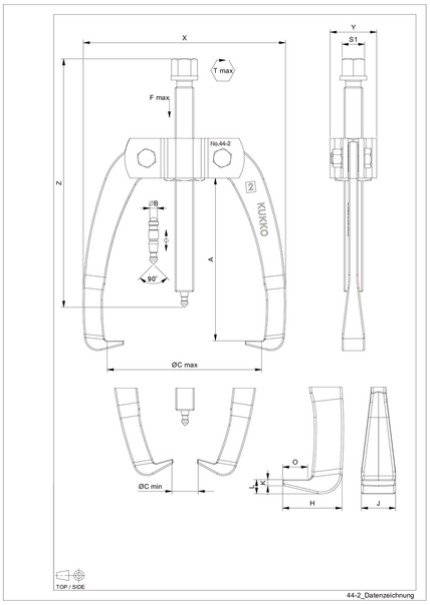

Abbreviation	Attribut	Wert
X	Total width [mm]	156 mm
Y	Total depth [mm]	35 mm
Z	Total height [mm]	181 mm
A	Clamping depth of external puller [mm]	120 mm
S1	Width across flats [mm]	17 mm
Cmin	Span outside pull-off (min.) [mm]	0 mm
Cmax	Span outside pull-off (max.) [mm]	120 mm
K	Hook root thickness at the tip (claw thickness K) [mm]	3 mm
J	Hook base width (claw width J) [mm]	17 mm
O	Hook base depth usable (claw depth usable O) [mm]	14 mm
H	Total hook root depth (total claw depth H) [mm]	32 mm
L	Total claw thickness (L+1mm) [mm]: (claw distance to base surface)	10 mm
Tmax	Max. torque [Nm]	85 Nm
Fmax	Max. tractive force [t]	5 t
Fmax	Max. tensile force [kN]	50 kN