483-5 3-jaw force-amplifying, self-centering Puller with self-centering jaws, up to 250 mm spread, 250 mm reach



DESCRIPTION

The handy, 3-jaw puller with force-amplifying, self-centering and tensioning jaws is used for pulling bearings, gears and discs in tight and hard-to-reach gaps. This makes it possible to loosen any component that sits on a shaft and is freely accessible from the outside. Thanks to the integrated force-amplifying mechanism with spring mechanism, the clamping force increases proportionally to the pulling force. Tightening the spindle automatically centers the jaws. The 3-jaw design guarantees even load distribution and thus a particularly secure grip on the part to be pulled.

APPLICATION AREA

To remove bearings, gears, and discs for tight and hard-to-reach spaces.

BENEFIT

- Self-centering of the jaws through manual tightening of the spindle (Autogrip Technology)
- The slim design of the jaws enables access to difficult-to-reach areas.
- 3-jaw ensures an even distribution of force and allows for greater pulling forces.
- Anti-slip safety (spindle neck) at the spindle head for safe working with a wrench.
- The thread shape allows for quick tightening of the spindle, as fewer rotations are required.
- Hexagon on the spindle is suitable for operation with powered tools.

OPERATION

- Place the puller jaws from the outside onto the part to be removed
- Pivot the claws under the component
- Manually pull the spindle to secure it
- Use a ratchet or a ring spanner to turn the hexagon on the spindle head until the component is loosened

MASTER DATA

GTIN [GTIN]	4021176480669
Country of origin	DE
Material	Tool steel
Series	483
Gross weight [kg]	2,395 kg
Package contents	1 piece
Packaging Act	PAPPE PAP 21
Worldwide sales capability	Yes (REACH, RoHS, POP, PROP65, TSCA)

SPARE PARTS

- 483-4-T_Crossbar
- 483-5-206_Press spindle
- 483-5-250-S_3 puller set

DETAIL IMAGE



3-jaw force-amplifying, self-centering Puller with self-centering jaws, up to 250 mm spread, 250 mm reach

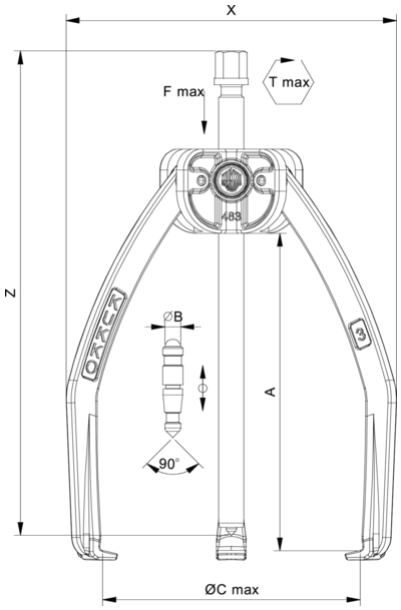

Abbreviation	Attribut	Wert
X	Total width [mm]	280 mm
Y	Total depth [mm]	33 mm
Z	Total height [mm]	350 mm
A	Clamping depth of external puller [mm]	250 mm
S1	Width across flats [mm]	17 mm
Cmin	Span outside pull-off (min.) [mm]	0 mm
Cmax	Span outside pull-off (max.) [mm]	250 mm
K	Hook root thickness at the tip (claw thickness K) [mm]	3,5 mm
J	Hook base width (claw width J) [mm]	16 mm
O	Hook base depth usable (claw depth usable O) [mm]	12 mm
H	Total hook root depth (total claw depth H) [mm]	27 mm
L	Total claw thickness (L+1mm) [mm]: (claw distance to base surface)	8 mm
Tmax	Max. torque [Nm]	40 Nm
Fmax	Max. tractive force [t]	3 t
Fmax	Max. tensile force [kN]	30 kN

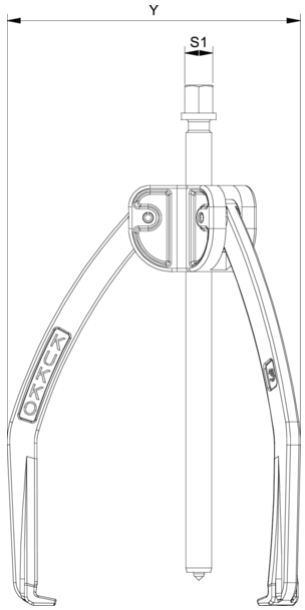

Abbreviation	Attribut	Wert
X	Total width [mm]	280 mm
Y	Total depth [mm]	33 mm
Z	Total height [mm]	350 mm
A	Clamping depth of external puller [mm]	250 mm
S1	Width across flats [mm]	17 mm
Cmin	Span outside pull-off (min.) [mm]	0 mm
Cmax	Span outside pull-off (max.) [mm]	250 mm
K	Hook root thickness at the tip (claw thickness K) [mm]	3,5 mm
J	Hook base width (claw width J) [mm]	16 mm
O	Hook base depth usable (claw depth usable O) [mm]	12 mm
H	Total hook root depth (total claw depth H) [mm]	27 mm
L	Total claw thickness (L+1mm) [mm]: (claw distance to base surface)	8 mm
Tmax	Max. torque [Nm]	40 Nm
Fmax	Max. tractive force [t]	3 t
Fmax	Max. tensile force [kN]	30 kN

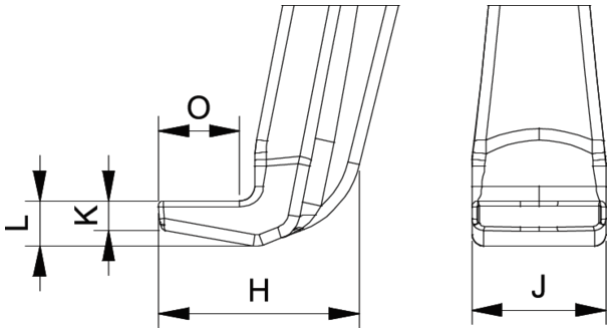

Abbreviation	Attribut	Wert
X	Total width [mm]	280 mm
Y	Total depth [mm]	33 mm
Z	Total height [mm]	350 mm
A	Clamping depth of external puller [mm]	250 mm
S1	Width across flats [mm]	17 mm
Cmin	Span outside pull-off (min.) [mm]	0 mm
Cmax	Span outside pull-off (max.) [mm]	250 mm
K	Hook root thickness at the tip (claw thickness K) [mm]	3,5 mm
J	Hook base width (claw width J) [mm]	16 mm
O	Hook base depth usable (claw depth usable O) [mm]	12 mm

H	Total hook root depth (total claw depth H) [mm]	27 mm
L	Total claw thickness (L+1mm) [mm]: (claw distance to base surface)	8 mm
Tmax	Max. torque [Nm]	40 Nm
Fmax	Max. tractive force [t]	3 t
Fmax	Max. tensile force [kN]	30 kN