482-3 2-jaw pullers with force-amplifying, self-centering, clamping jaws, up to 150 mm spread, 150 mm reach



DESCRIPTION

The handy 2-jaw puller with force-amplifying, self-centering and clamping jaws 482-3 is used to pull bearings, gears and discs in confined and hard-to-reach spaces. It can be used to remove any component that is mounted on a shaft and freely accessible from the outside. Thanks to the integrated force amplification with spring mechanism, the jaws are self-retaining, and the clamping force increases in proportion to the pulling force. When the spindle is tightened, the jaws are automatically centered.

APPLICATION AREA

To remove bearings, gears, and discs for tight and hard-to-reach spaces.

BENEFIT

- Self-centering of the jaws through manual tightening of the spindle (Autogrip Technology)
- An integrated, free-moving pen at the T-handle ensures manual spindle drive in the tightest spaces.
- The slim design of the jaws allows access to poorly accessible areas.
- The thread design allows for a quick tightening of the spindle, as fewer rotations are required.
- The hexagon on the spindle is suitable for operation with powered tools.

OPERATION

- Place the puller jaws from the outside against the part to be removed
- Pivot the claws under the component
- Manually pull the spindle for fixation
- Start the T-handle on the spindle head until the component is released

MASTER DATA

GTIN [GTIN]	4021176479939
Country of origin	DE
Material	Tool steel
Series	482
Gross weight [kg]	0,875 kg
Package contents	1 piece
Packaging Act	Rezykkat rHDPE 61
Worldwide sales capability	Yes (REACH, RoHS, POP, PROP65, TSCA)

APPLICATION IMAGE

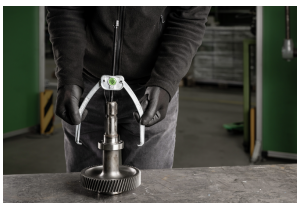

SPARE PARTS

- 482-3-150-P_2 jaws (pair)
- 482-3-206_pressure spindle
- 482-3-T_Crossbar

2-jaw pullers with force-amplifying, self-centering, clamping jaws, up to 150 mm spread, 150 mm reach

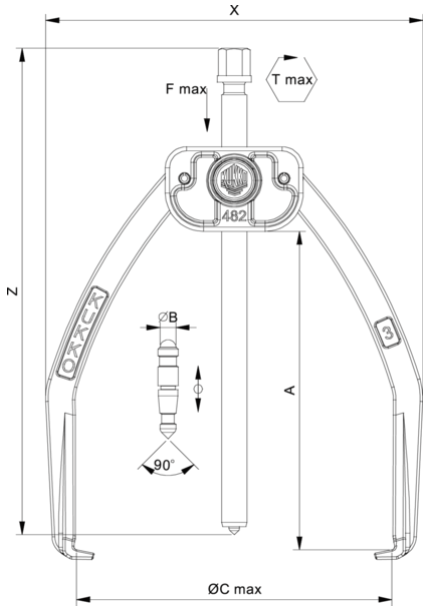

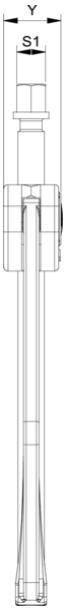

Abbreviation	Attribut	Wert
X	Total width [mm]	174 mm
Y	Total depth [mm]	26 mm
Z	Total height [mm]	230 mm
A	Clamping depth of external puller [mm]	150 mm
S1	Width across flats [mm]	13 mm
Cmin	Span outside pull-off (min.) [mm]	4 mm
Cmax	Span outside pull-off (max.) [mm]	150 mm
K	Hook root thickness at the tip (claw thickness K) [mm]	3 mm
J	Hook base width (claw width J) [mm]	14 mm
O	Hook base depth usable (claw depth usable O) [mm]	8 mm
H	Total hook root depth (total claw depth H) [mm]	20 mm
L	Total claw thickness (L+1mm) [mm]: (claw distance to base surface)	6 mm
Tmax	Max. torque [Nm]	35 Nm
Fmax	Max. tractive force [t]	2.5 t
Fmax	Max. tensile force [kN]	25 kN

Abbreviation	Attribut	Wert
X	Total width [mm]	174 mm
Y	Total depth [mm]	26 mm
Z	Total height [mm]	230 mm
A	Clamping depth of external puller [mm]	150 mm
S1	Width across flats [mm]	13 mm
Cmin	Span outside pull-off (min.) [mm]	4 mm
Cmax	Span outside pull-off (max.) [mm]	150 mm
K	Hook root thickness at the tip (claw thickness K) [mm]	3 mm
J	Hook base width (claw width J) [mm]	14 mm
O	Hook base depth usable (claw depth usable O) [mm]	8 mm
H	Total hook root depth (total claw depth H) [mm]	20 mm
L	Total claw thickness (L+1mm) [mm]: (claw distance to base surface)	6 mm
Tmax	Max. torque [Nm]	35 Nm
Fmax	Max. tractive force [t]	2.5 t
Fmax	Max. tensile force [kN]	25 kN

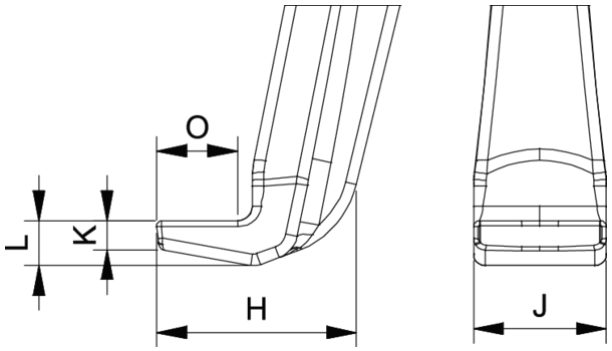

Abbreviation	Attribut	Wert
X	Total width [mm]	174 mm
Y	Total depth [mm]	26 mm
Z	Total height [mm]	230 mm
A	Clamping depth of external puller [mm]	150 mm
S1	Width across flats [mm]	13 mm
Cmin	Span outside pull-off (min.) [mm]	4 mm
Cmax	Span outside pull-off (max.) [mm]	150 mm
K	Hook root thickness at the tip (claw thickness K) [mm]	3 mm
J	Hook base width (claw width J) [mm]	14 mm

O	Hook base depth usable (claw depth usable O) [mm]	8 mm
H	Total hook root depth (total claw depth H) [mm]	20 mm
L	Total claw thickness (L+1mm) [mm]: (claw distance to base surface)	6 mm
Tmax	Max. torque [Nm]	35 Nm
Fmax	Max. tractive force [t]	2.5 t
Fmax	Max. tensile force [kN]	25 kN

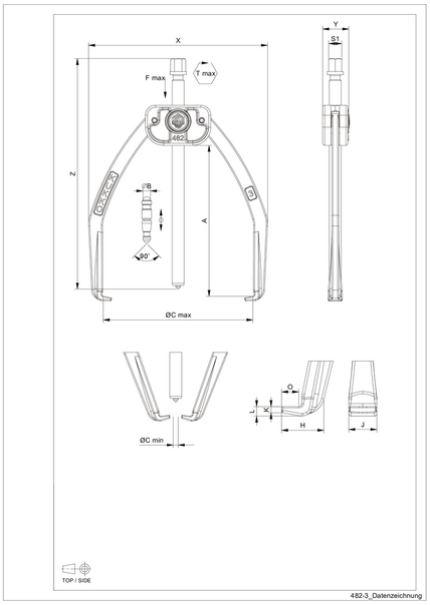

Abbreviation	Attribut	Wert
X	Total width [mm]	174 mm
Y	Total depth [mm]	26 mm
Z	Total height [mm]	230 mm
A	Clamping depth of external puller [mm]	150 mm
S1	Width across flats [mm]	13 mm
Cmin	Span outside pull-off (min.) [mm]	4 mm
Cmax	Span outside pull-off (max.) [mm]	150 mm
K	Hook root thickness at the tip (claw thickness K) [mm]	3 mm
J	Hook base width (claw width J) [mm]	14 mm
O	Hook base depth usable (claw depth usable O) [mm]	8 mm
H	Total hook root depth (total claw depth H) [mm]	20 mm
L	Total claw thickness (L+1mm) [mm]: (claw distance to base surface)	6 mm
Tmax	Max. torque [Nm]	35 Nm
Fmax	Max. tractive force [t]	2.5 t
Fmax	Max. tensile force [kN]	25 kN