Moer M10 | Mondolfo Ferro 2-91726

Teco TECO BPS · 2016 · Tekening 6 · positie C13 (2 keer op deze tekening)

	TAV. C	BPS (da matricola / from s.n. 080260001)

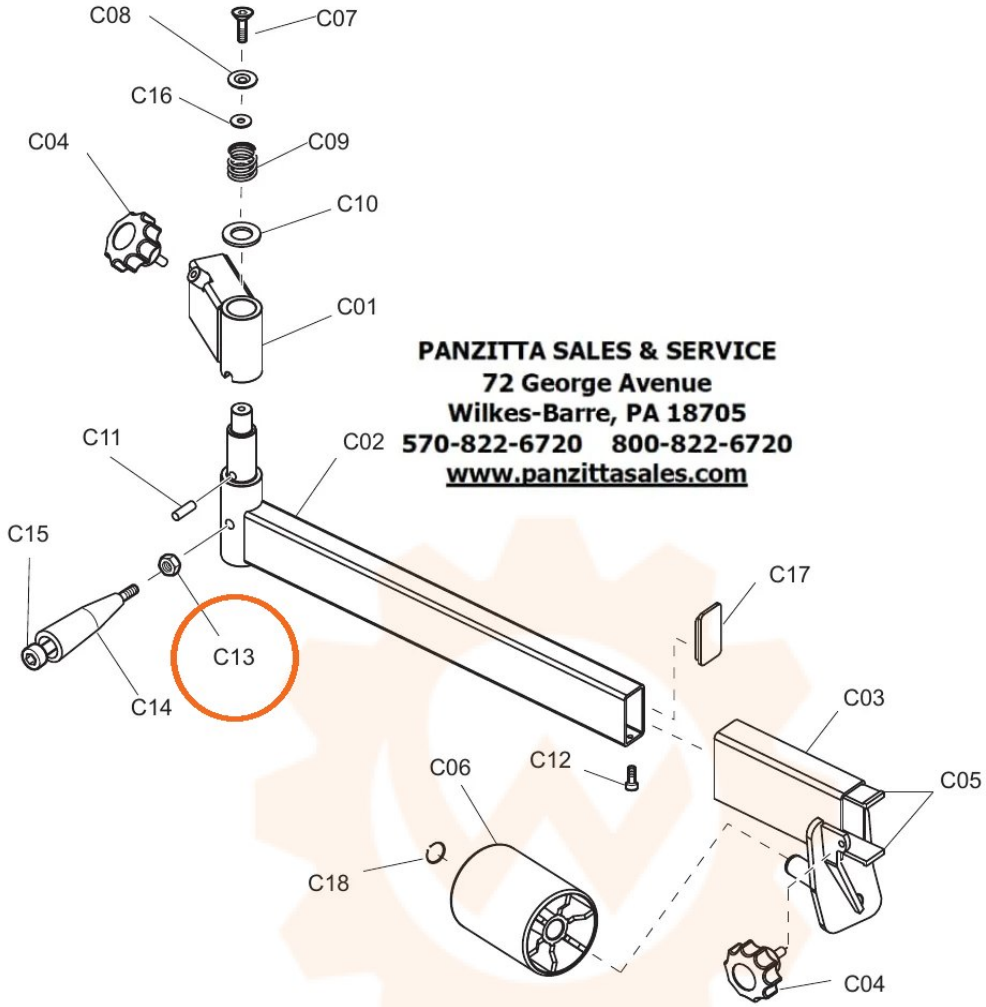

PANZITTA SALES & SERVICE
72 George Avenue
Wilkes-Barre, PA 18705
570-822-6720 800-822-6720
www.panzittasales.com

RS	REF	COD.	DESCRIZIONE	DESCRIPTION
	C01	4-601498B-1	SUPPORTO	SUPPORT
	C02	4-601500-1	BRACCIO PT	PT ARM
	C03	4-600404-1	SUPPORTO RULLO	ROLLER SUPPORT
	C04	045201400	MANOPOLA	KNOB
	C05	008400700	SLITTA	SLIDE
	C06	3316341	RULLO	ROLLER
	C07	2-02866	VITE SPEI M8X20	SCREW M8X20
	C08	4-601496	GUIDA MOLLA	SPRING GUIDE
	C09	005605800	MOLLA	SPRING
	C10	2-01038	RONDELLA	WASHER
	C11	2-71580	SPINA D8X30	PIN
	C12	2-00308	VITE TCEI M6X10	SCREW M6X10
	C13	2-91726	DADO ES M10	NUT M10
	C14	4-601495	MANIGLIA	KNOB
	C15	2-01109	VITE TCEI M10X80	SCREW M10X80
	C16	2-00212	RONDELLA D8	WSASHER D.8
	C17	3-01555	TAPPO	CAP
	C18	2-71587	ANELLO EL. D.20	SEEGER D. 20

RS=RICAMBI CONSIGLIATI/RECOMMENDED SPARES