C-97-1901000

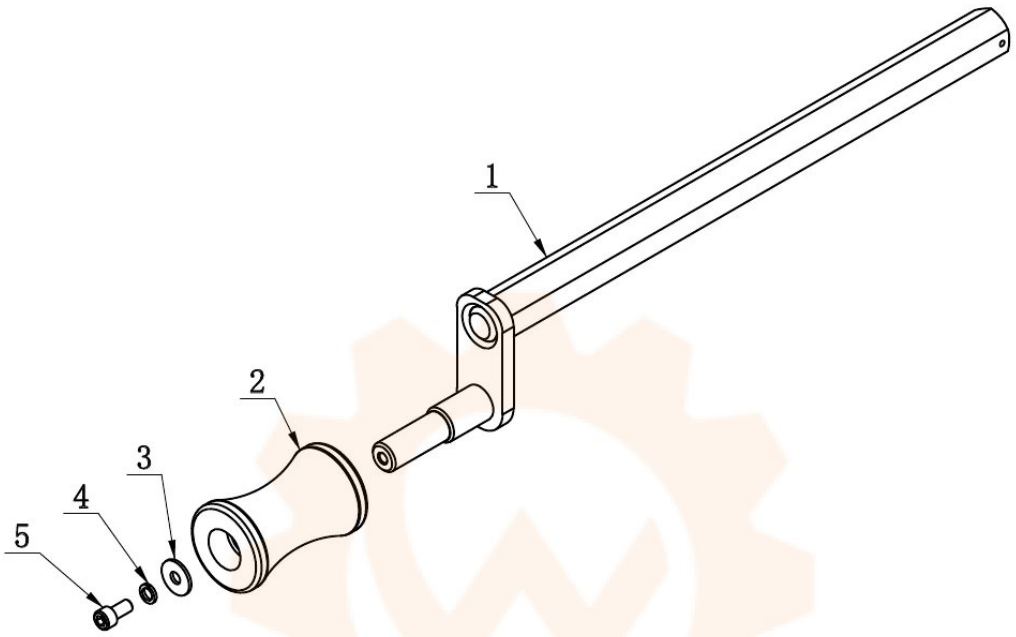

ITEM	PART. No	DESCRIPTION.	QT. Y
1	C-97-1901100	PRESS SHAFT WELLDING	1
2	H-30-1000012	PRESS CONE	1
3	GB96. 1-10	LARGE WASHER A GRADE	1
4	GB93-10	STANDARD SPRING WASHER	1
5	GB70. 1-M10×20-LH	INNER HEXA CYLINDRICAL SCREW	1