# 21-44-E Internal extractor with spread 15 mm - 20 mm, 45 mm reach




## DESCRIPTION

The segment internal extractors of series 21-E are used for extracting flush-mounted bearings, bearing outer rings, sleeves, and seals in crafts, workshops, and industry. The segmented design with extra fine gripping edges allows for the safe extraction of flush-mounted parts. The 21 series impresses with its compatibility and application diversity. Depending on the application, there are numerous variants of the segment internal extractors. They are either used together with counter stays or with sliding hammers.

## APPLICATION AREA

To remove bearing pullers, bearing outer rings, bushings, and seals in craftsmanship, workshops, and industry.

## BENEFIT

- Due to its segmentation and fine spindle design, the segment puller is ideal for precise and gentle work.
- The mechanical spindle extracts bearings that are tightly seated on the back wall safely and quickly.
- The shaping ensures a secure grip when seating and swiveling for bearings or inner rings that form a blind hole.
- The thread adapters for internal extractors are included in the delivery of the counter stays and sliding hammers.

## OPERATION

- Determine the inner diameter of the ball bearing and select the appropriate internal puller
- Insert the internal puller into the hole and tighten the locking nut
- If a support surface is available, choose the counter stay; otherwise, select the sliding hammer

Operation with counter stay:

- Support the counter stay on the housing and screw it onto the wedge spindle of the internal puller
- Hold the handle of the counter stay and safely pull out the bearing by tightening the nut
- Retighten the locking nut while pulling out

Operation with sliding hammer:

- Screw the sliding hammer rod onto the wedge spindle of the internal puller
- Use the sliding hammer with a striking motion to pull out the bearing

## APPLICATION IMAGE



## MASTER DATA

| | |
|---|---|
| GTIN [GTIN] | 4021176039300 |
| Country of origin | DE |
| Material | Tool steel |
| Series | 21-E |
| Gross weight [kg] | 0,2 kg |
| Package contents | 1 piece |
| Packaging Act | PAPPE PAP 21 |
| Worldwide sales capability | Yes (REACH, RoHS, POP, PROP65, TSCA) |

## SUITABLE FOR

- 22-0-05 Sliding Hammer Device with 0.5 kg Impact Weight
- 22-0-17 Sliding Hammer Device with 1.7 kg Impact Weight
- 22-1_Counter Stay
- 22-2_Counter Stay

# Internal extractor with spread 15 mm - 20 mm, 45 mm reach

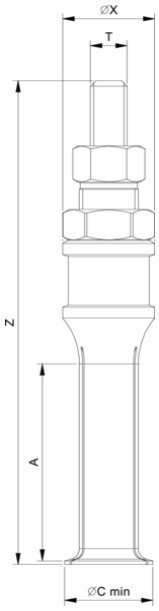


| Abbreviation | Attribut | Wert |
|---|---|---|
| Z | Total height [mm] | 125 mm |
| S1 | Width across flats [mm] | 14 mm |
| S2 | Width across flats [mm] | 22 mm |
| Emin | Span inside pull-out (min.) [mm] | 15 mm |
| Emax | Span inside pull-out (max.) [mm] | 20 mm |
| X | Diameter of the extractor [mm] | 25 mm |
| T | Mounting thread [mm] | M10 |




| Abbreviation | Attribut | Wert |
|---|---|---|
| Z | Total height [mm] | 125 mm |
| S1 | Width across flats [mm] | 14 mm |
| S2 | Width across flats [mm] | 22 mm |
| Emin | Span inside pull-out (min.) [mm] | 15 mm |
| Emax | Span inside pull-out (max.) [mm] | 20 mm |
| X | Diameter of the extractor [mm] | 25 mm |
| T | Mounting thread [mm] | M10 |

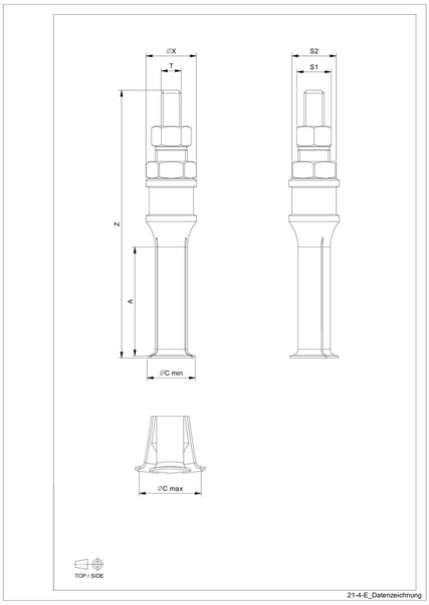


| Abbreviation | Attribut | Wert |
|---|---|---|
| Z | Total height [mm] | 125 mm |
| S1 | Width across flats [mm] | 14 mm |
| S2 | Width across flats [mm] | 22 mm |
| Emin | Span inside pull-out (min.) [mm] | 15 mm |
| Emax | Span inside pull-out (max.) [mm] | 20 mm |
| X | Diameter of the extractor [mm] | 25 mm |

| | | |
|---|---|---|
| T | Mounting thread [mm] | M10 |