Inbusbout M10 x 20 | Mondolfo Ferro 2-03553

Corghi A9222 TI · 2026 · Self-centering pedal + connecting rod · positie 1

SELF-CENTERING PEDAL + CONNECTING ROD

Jaw Pedal

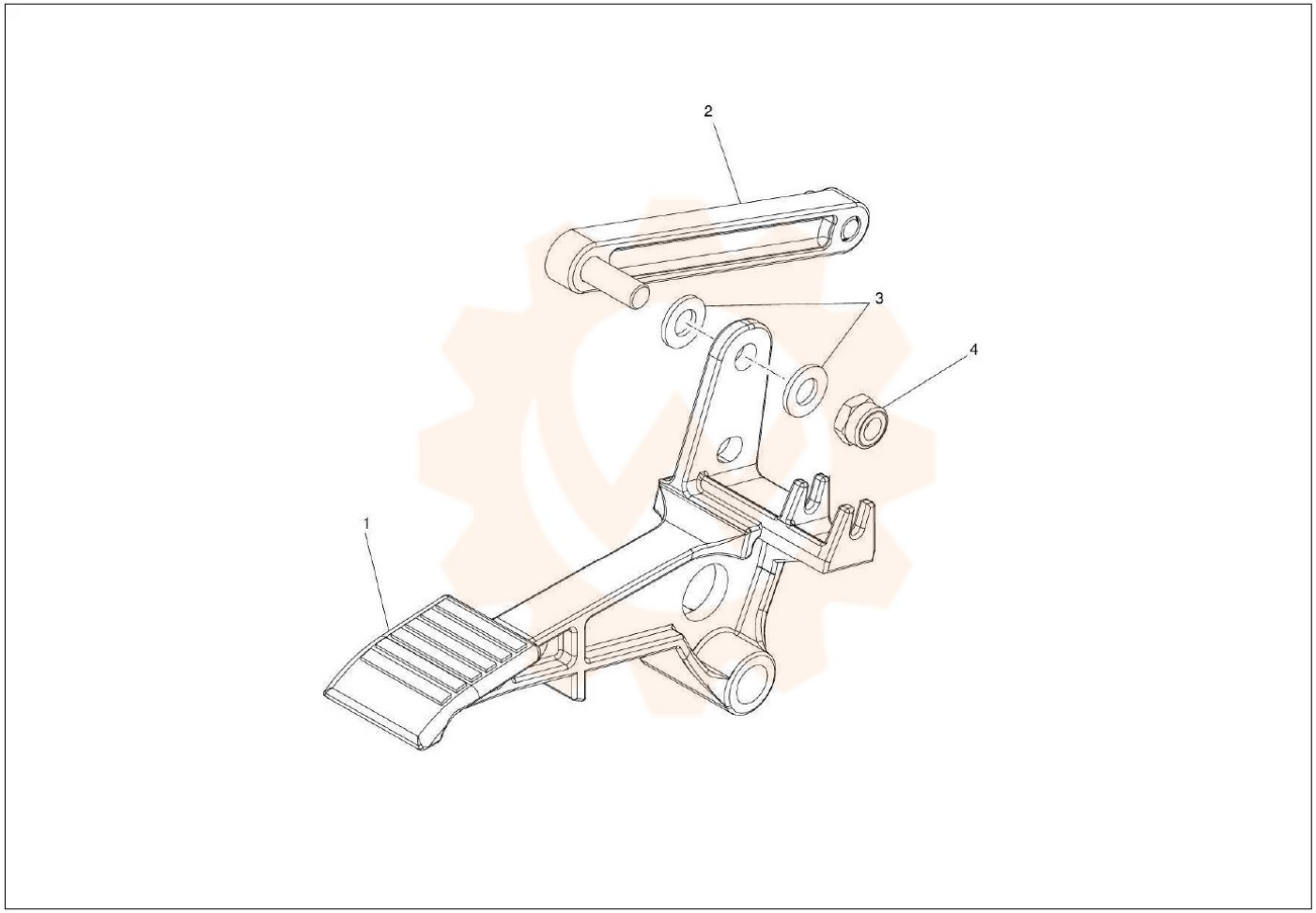

Return to Overall

Onderdelentekening Mondolfo Ferro · Workshopparts B.V. · workshopparts.nl · artikelnummer 903980