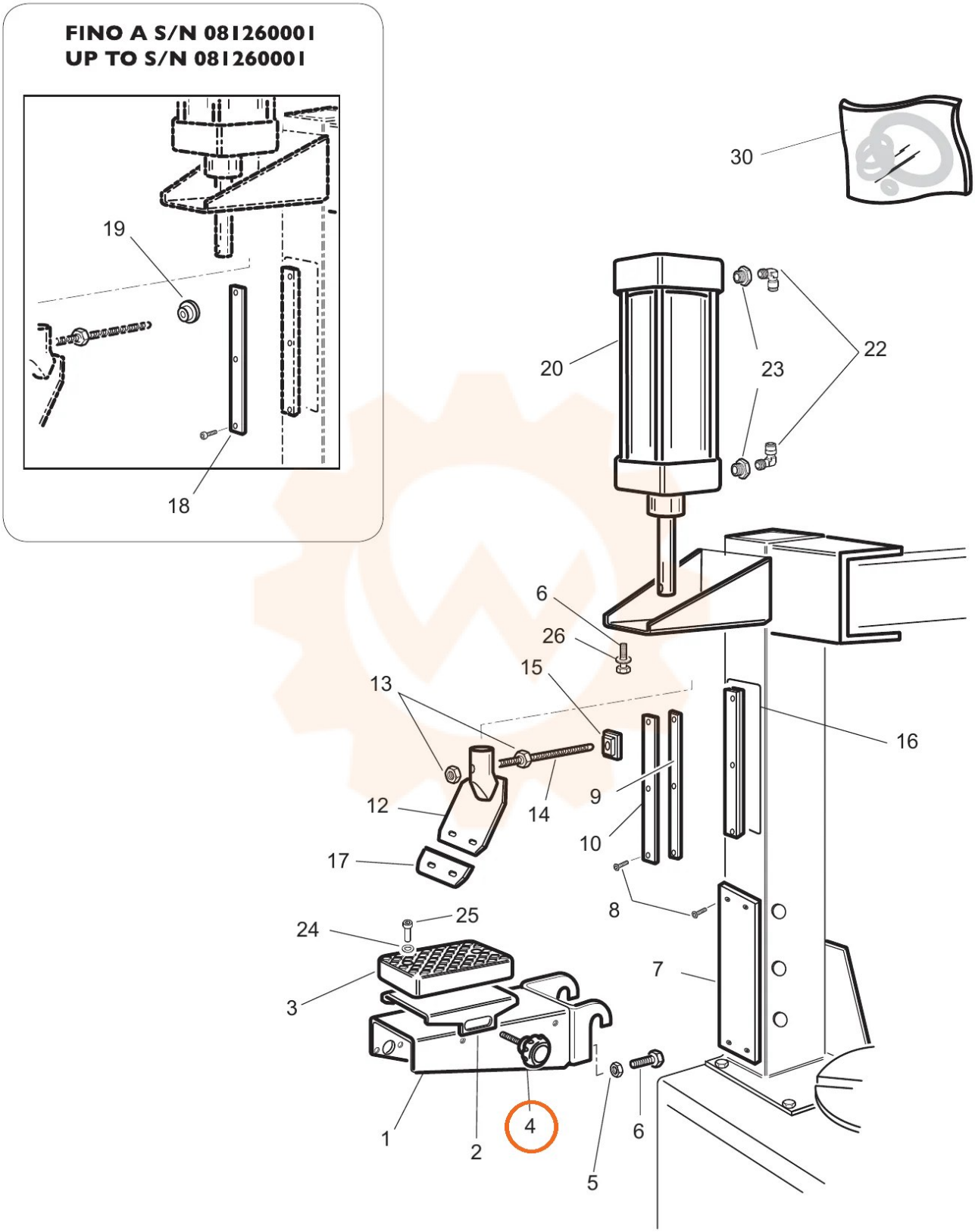
FINO A S/N 081260001
UP TO S/N 081260001
19
18
30
20
23
22
6
26
15
13
16
12
14
9
10
17
8
24
25
7
3
1
2
4
6
5