Manometer G1/8 0-12 bar | Mondolfo Ferro 3-00488

Mondolfo Ferro AS914 TI · 2026 · Tekening 6 · positie 33

FINO A MATR. / UP TO S/N CSF014921

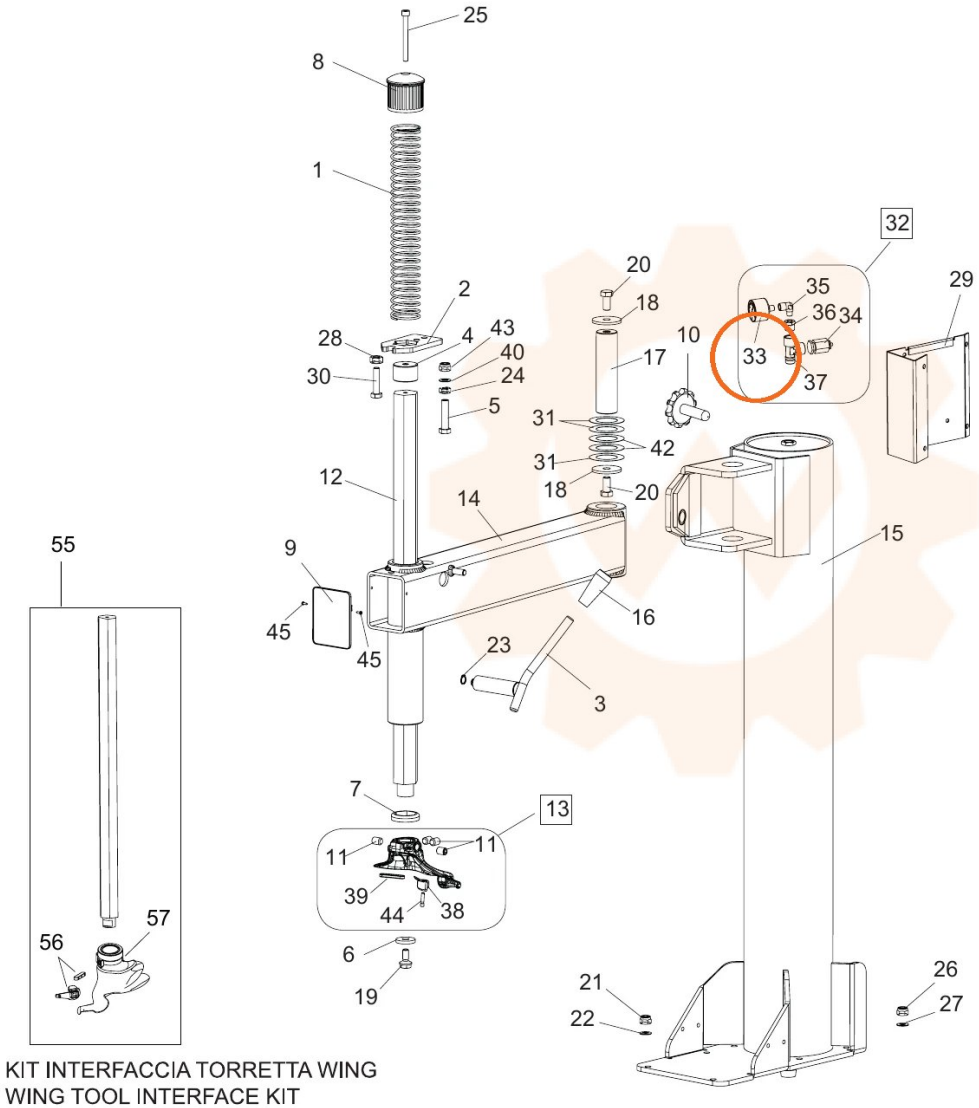

KIT INTERFACCIA TORRETTA WING
WING TOOL INTERFACE KIT

