42-4 3-jaw universal puller with swiveling jaws, up to 130 mm spread, 160 mm reach



DESCRIPTION

The 3-jaw universal puller with swiveling jaws is used for pulling bearings, gears, and discs in all common sizes for crafts, workshops, and industry. It allows for the loosening of any component that is mounted on a shaft and accessible from the outside. The swiveling jaws also provide maximum freedom of movement for individual adaptation to the respective spread and depth, even in restricted environmental conditions. The 3-jaw design guarantees an even weight distribution and thus a particularly secure hold on the part being pulled. Within series 42, there are various designs of the puller. Up to model 41-2, the puller is equipped with a T-handle and a flat pressure piece for work in tight spaces. Starting from model 42-3, the puller features a hexagon drive and a dual spindle tip. This allows for achieving the highest pulling forces (3 to 7 tons).

APPLICATION AREA

To detach bearings, gears, and discs in all common sizes for crafts, workshops, and industry.

BENEFIT

- Swiveling puller jaws allow for work in tight spaces while simultaneously providing individual adjustment for spread and reach.
- 3-jaw provides an even distribution of force and allows for greater pulling forces.
- Spindle outlet for thread protection
- Spindle outlet to protect the thread
- Secure installation of the spindle through a rotatable spindle tip on both smooth surfaces and during centering (Switch Technology) (applies from size 42-3)
- Integrated, freely movable T-handle guarantees manual spindle drive in confined spaces (applies up to size 41-2)

OPERATION

- Swivel the puller jaws from the outside onto the part to be pulled off
- Slide the claws under the component
- Manually pull the spindle for fixation
- Manually operate the T-handle or set the hexagon head on the spindle with a ratchet or an open-end wrench until the component is released

APPLICATION IMAGE

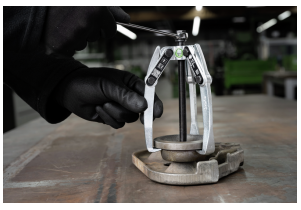

DETAIL IMAGE



MASTER DATA

GTIN [GTIN]	4021176836428
Country of origin	DE
Material	Tool steel
Series	42
Gross weight [kg]	2,08 kg
Package contents	1 piece
Packaging Act	PAPPE PAP 21
Worldwide sales capability	Yes (REACH, RoHS, POP, PROP65, TSCA)

SPARE PARTS

- 202-1-T_Crossbar
- 42-4-160-S_3 puller set
- 614200_Mechanical spindle

3-jaw universal puller with swiveling jaws, up to 130 mm spread, 160 mm reach

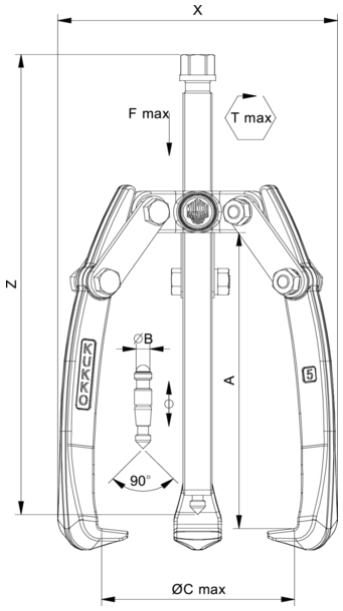

Abbreviation	Attribut	Wert
X	Total width [mm]	164 mm
Y	Total depth [mm]	164 mm
Z	Total height [mm]	220 mm
A	Clamping depth of external puller [mm]	160 mm
S1	Width across flats [mm]	17 mm
Cmin	Span outside pull-off (min.) [mm]	0 mm
Cmax	Span outside pull-off (max.) [mm]	130 mm
K	Hook root thickness at the tip (claw thickness K) [mm]	4 mm
J	Hook base width (claw width J) [mm]	24 mm
O	Hook base depth usable (claw depth usable O) [mm]	18 mm
H	Total hook root depth (total claw depth H) [mm]	35 mm
L	Total claw thickness (L+1mm) [mm]: (claw distance to base surface)	9 mm
Tmax	Max. torque [Nm]	85 Nm
Fmax	Max. tractive force [t]	5 t
Fmax	Max. tensile force [kN]	50 kN

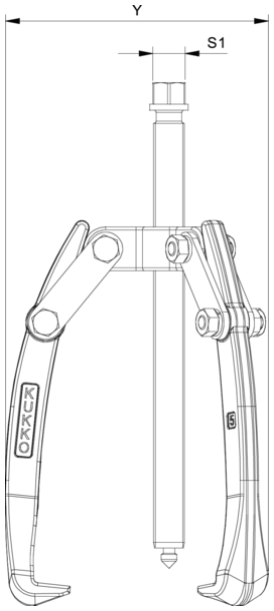

Abbreviation	Attribut	Wert
X	Total width [mm]	164 mm
Y	Total depth [mm]	164 mm
Z	Total height [mm]	220 mm
A	Clamping depth of external puller [mm]	160 mm
S1	Width across flats [mm]	17 mm
Cmin	Span outside pull-off (min.) [mm]	0 mm
Cmax	Span outside pull-off (max.) [mm]	130 mm
K	Hook root thickness at the tip (claw thickness K) [mm]	4 mm
J	Hook base width (claw width J) [mm]	24 mm
O	Hook base depth usable (claw depth usable O) [mm]	18 mm
H	Total hook root depth (total claw depth H) [mm]	35 mm
L	Total claw thickness (L+1mm) [mm]: (claw distance to base surface)	9 mm
Tmax	Max. torque [Nm]	85 Nm
Fmax	Max. tractive force [t]	5 t
Fmax	Max. tensile force [kN]	50 kN

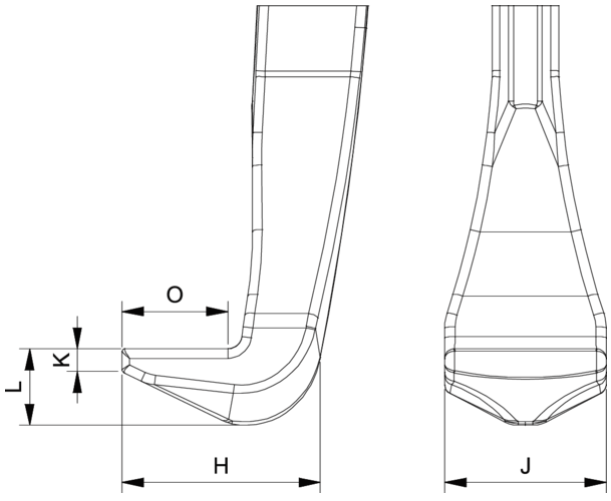

Abbreviation	Attribut	Wert
X	Total width [mm]	164 mm
Y	Total depth [mm]	164 mm
Z	Total height [mm]	220 mm

A	Clamping depth of external puller [mm]	160 mm
S1	Width across flats [mm]	17 mm
Cmin	Span outside pull-off (min.) [mm]	0 mm
Cmax	Span outside pull-off (max.) [mm]	130 mm
K	Hook root thickness at the tip (claw thickness K) [mm]	4 mm
J	Hook base width (claw width J) [mm]	24 mm
O	Hook base depth usable (claw depth usable O) [mm]	18 mm
H	Total hook root depth (total claw depth H) [mm]	35 mm
L	Total claw thickness (L+1mm) [mm]: (claw distance to base surface)	9 mm
Tmax	Max. torque [Nm]	85 Nm
Fmax	Max. tractive force [t]	5 t
Fmax	Max. tensile force [kN]	50 kN