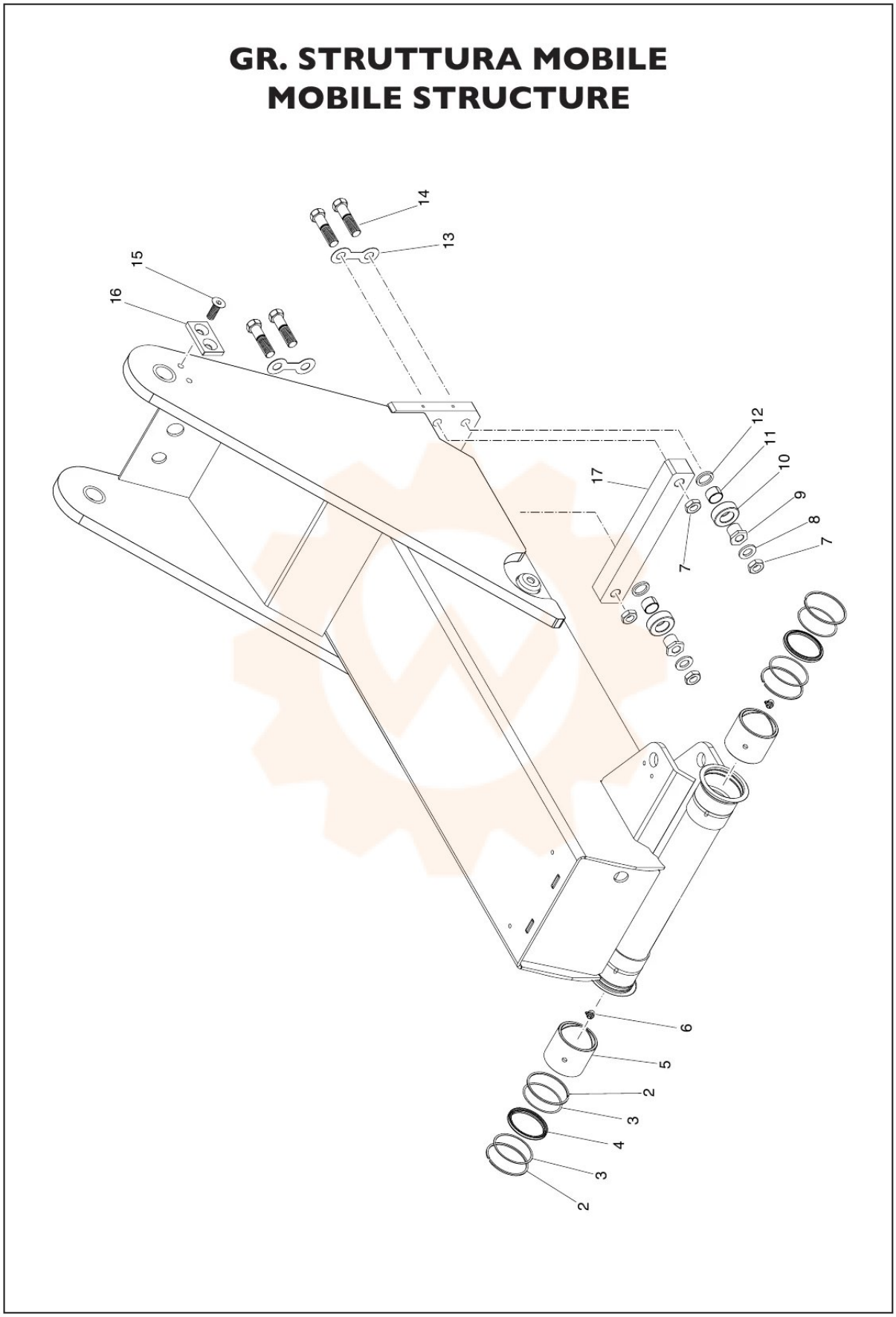
GR. STRUTTURA MOBILE
MOBILE STRUCTURE
14
13
15
16
12
11
10
9
8
7
17
7
6
5
2
3
4
3
2