12-4 3-jaw puller with presettable jaws for internal, external extraction, up to 250 mm spread, 225 mm reach



DETAIL IMAGE



DESCRIPTION

The 3-jaw puller with adjustable puller jaws for external and internal extraction is used for pulling bearings, gears, discs, etc. in all common sizes for crafts, workshops, and industry. This allows for the loosening of any component that either sits on a shaft and is freely accessible from the outside or is fitted internally and thus needs to be pulled differently. The models are equipped with one jaw support on the inside and the outside, allowing them to be used for both external pulling and internal extraction.

APPLICATION AREA

For internal and external extraction, suitable for pulling bearings, gears, discs, etc. in all common sizes for crafts, workshops, and industry.

BENEFIT

- The cross hooks ensure maximum stability for suspending the jaws in the sliding piece (Armlock Technology)
- The three-jaw design ensures even load distribution and a particularly secure hold.
- Smooth adjustment of the symmetrically tensioning arms to the required spread with a key allows for variable application.
- The hook eye is suitable for securing a fall protection system, leveling to the ideal pulling position, attaching a tension strap, and securing an accident protection cover.
- Also use as a mobile press possible

OPERATION

- Center the spindle on the shaft
- Clamp the key until the jaws securely grip the part to be removed
- Manually pull the spindle to secure it
- Use a ratchet or a box-end wrench to move the hexagon at the spindle head until the component is loosened
- Alternatively, adjust the hook support, insert the puller into the bore, and safely pull out the component by tightening the hexagon

MASTER DATA

GTIN [GTIN]	4021176850509
Country of origin	DE
Material	Tool steel
Series	12-A
Gross weight [kg]	11,99 kg
Package contents	1 piece
Packaging Act	PAPPE PAP 21
Worldwide sales capability	Yes (REACH, RoHS, POP, PROP65, TSCA)

SPARE PARTS

- 12-3-8_Key
- 12-4-206_Crossbar's inner bushings with spindle
- 12-4-225-E_1 jaws (single)
- 12-4-52_ Hinge crossbar for 12-4
- 12-4-T_Crossbar
- 626400_Hydraulic spindle

3-jaw puller with presettable jaws for internal, external extraction, up to 250 mm spread, 225 mm reach

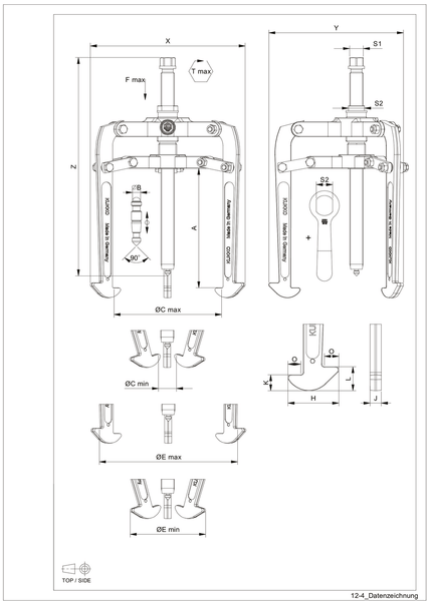

Abbreviation	Attribut	Wert
X	Total width [mm]	338 mm
Y	Total depth [mm]	338 mm
Z	Total height [mm]	430 mm
A	Clamping depth of external puller [mm]	225 mm
S1	Width across flats [mm]	27 mm
Cmin	Span outside pull-off (min.) [mm]	0 mm
Cmax	Span outside pull-off (max.) [mm]	250 mm
K	Hook root thickness at the tip (claw thickness K) [mm]	8 mm
J	Hook base width (claw width J) [mm]	18 mm
O	Hook base depth usable (claw depth usable O) [mm]	19 mm
H	Total hook root depth (total claw depth H) [mm]	63 mm
L	Total claw thickness (L+1mm) [mm]: (claw distance to base surface)	20 mm
Tmax	Max. torque [Nm]	300 Nm
Fmax	Max. tractive force [t]	10 t
Fmax	Max. tensile force [kN]	100 kN