140-1 Micro-Puller for small parts, model making, up to 10 mm spread, 10 mm reach



DESCRIPTION

The micro puller is used for removing speedometer cables, pressure gauges, clocks, and similar parts. Especially in model making, the small parts puller is a helpful and reliable tool. The handy and space-saving model features narrow jaws that are particularly suitable for tight, hard-to-reach areas. The freely movable pin on the T-handle ensures comfortable one-handed tightening of the spindle in cramped spaces. The spindle tip can be easily replaced using a magnetic closure.

APPLICATION AREA

To remove speedometer cables, pressure gauges, clocks, and similar parts.

BENEFIT

- Integrated, free-moving pen on the T handle ensures manual spindle drive in the tightest spaces
- Compact and handy design for precise work in tight spaces
- Narrow gripping jaws reach even the tightest spaces.
- The magnetic closure ensures a quick exchange of the spindle tip.

OPERATION

- Slide the jaws under the part to be removed
- Manually pull the spindle for fixation
- Move the T-handle on the spindle head until the component is released

MASTER DATA

GTIN [GTIN]	4021176266720
Country of origin	DE
Material	Tool steel
Series	140
Gross weight [kg]	0,035 kg
Package contents	1 piece
Packaging Act	Rezykkat rHDPE 61
Worldwide sales capability	Yes (REACH, RoHS, POP, PROP65, TSCA)

SPARE PARTS

- 140-S-E_5 replacement tips

APPLICATION IMAGE

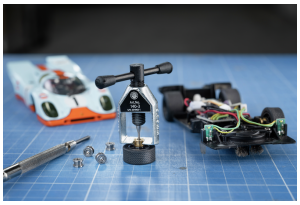

Micro-Puller for small parts, model making, up to 10 mm spread, 10 mm reach

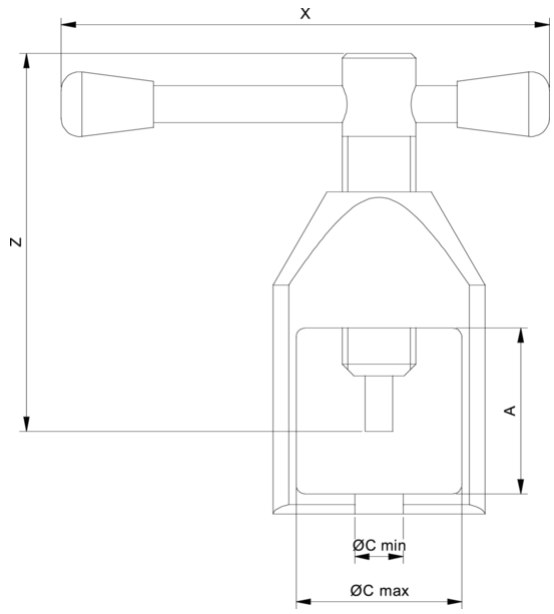

Abbreviation	Attribut	Wert
X	Total width [mm]	50 mm
Y	Total depth [mm]	10 mm
Z	Total height [mm]	40 mm
A	Clamping depth of external puller [mm]	10 mm
Cmin	Span outside pull-off (min.) [mm]	2,5 mm
Cmax	Span outside pull-off (max.) [mm]	10 mm
K	Hook root thickness at the tip (claw thickness K) [mm]	1 mm
H	Total hook root depth (total claw depth H) [mm]	10 mm
L	Total claw thickness (L+1mm) [mm]: (claw distance to base surface)	1,2 mm
B	Center point diameter [mm]	0,9, 1,3, 1,8

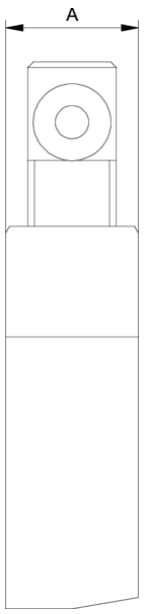

Abbreviation	Attribut	Wert
X	Total width [mm]	50 mm
Y	Total depth [mm]	10 mm
Z	Total height [mm]	40 mm
A	Clamping depth of external puller [mm]	10 mm
Cmin	Span outside pull-off (min.) [mm]	2,5 mm
Cmax	Span outside pull-off (max.) [mm]	10 mm
K	Hook root thickness at the tip (claw thickness K) [mm]	1 mm
H	Total hook root depth (total claw depth H) [mm]	10 mm
L	Total claw thickness (L+1mm) [mm]: (claw distance to base surface)	1,2 mm
B	Center point diameter [mm]	0,9, 1,3, 1,8

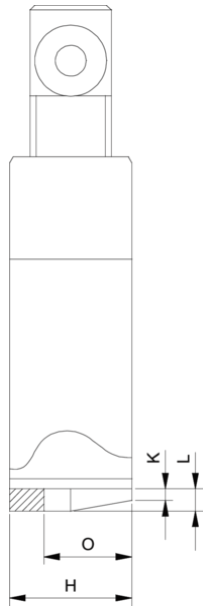

Abbreviation	Attribut	Wert
X	Total width [mm]	50 mm

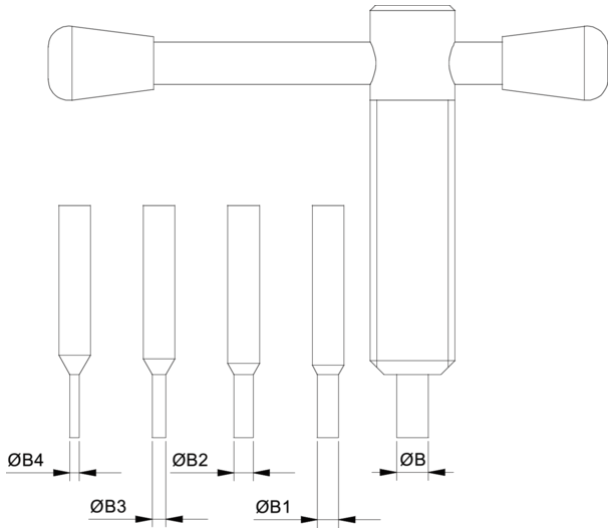

Abbreviation	Attribut	Wert
X	Total width [mm]	50 mm
Y	Total depth [mm]	10 mm
Z	Total height [mm]	40 mm
A	Clamping depth of external puller [mm]	10 mm

Y	Total depth [mm]	10 mm
Z	Total height [mm]	40 mm
A	Clamping depth of external puller [mm]	10 mm
Cmin	Span outside pull-off (min.) [mm]	2,5 mm
Cmax	Span outside pull-off (max.) [mm]	10 mm
K	Hook root thickness at the tip (claw thickness K) [mm]	1 mm
H	Total hook root depth (total claw depth H) [mm]	10 mm
L	Total claw thickness (L+1mm) [mm]: (claw distance to base surface)	1,2 mm
B	Center point diameter [mm]	0,9, 1,3, 1,8

Cmin	Span outside pull-off (min.) [mm]	2,5 mm
Cmax	Span outside pull-off (max.) [mm]	10 mm
K	Hook root thickness at the tip (claw thickness K) [mm]	1 mm
H	Total hook root depth (total claw depth H) [mm]	10 mm
L	Total claw thickness (L+1mm) [mm]: (claw distance to base surface)	1,2 mm
B	Center point diameter [mm]	0,9, 1,3, 1,8