20-40-AV 2-jaw universal puller with adjustable reach from 500 mm to 500 mm, spread up to 650 mm



DESCRIPTION

The 2-jaw universal puller with adjustable reach is used for pulling bearings, gears, and discs in all common sizes for trades, workshops, and industry. The 20-5 is the largest of its kind in the world, making it the most powerful puller in the 20 series. It can loosen any component that sits on a shaft and is freely accessible from the outside. The puller adapts to any pulling situation due to its individually adjustable spread and reach, ensuring a particularly safe, non-destructive disassembly during both external extraction and internal extraction.

APPLICATION AREA

To detach bearings, gears, and discs in all common sizes for crafts, workshops, and industry.

BENEFIT

- The screw connection allows for easy loosening and particularly tight fastening of the jaws with an allen key
- Application also for eccentric components through freely movable jaws gliding on the crossbar
- Variable adjustment for any span between 0 mm – 650 mm as well as reach depth between 500 mm – 500 mm
- - Variable adaptation to any span width between xx - xxx mm as well as clamping depth xx - xxx mm
- Nothing
- Anti-slip safety (spindle neck) at the spindle head for safe working with a wrench
- Spindle run-out to protect the thread
- Pullers are labeled with technical attributes and manufacturer information (label)
- Jaws, spindle, and crossbar have a spare part number for easy reordering.

OPERATION

- Place the puller jaws from the outside onto the part to be removed
- Slide the jaws under the component
- Use a wrench to secure the jaws
- Manually pull the spindle for fixation
- Activate the hexagon on the spindle head with a ratchet or a claw wrench until the component is loosened

MASTER DATA

GTIN [GTIN]	4021176973222
Country of origin	DE
Material	Tool steel
Series	20-AV
Gross weight [kg]	20,3 kg
Package contents	1 piece
Packaging Act	PAPPE PAP 21
Worldwide sales capability	Yes (REACH, RoHS, POP, PROP65, TSCA)

SPARE PARTS

- 20-40-T_Crossbar for 20-40
- 4-SP-P_jaws with adjustable length (pair)
- 633370_Double-sided spindle tip
- 633500_Mechanical pressure spindle

2-jaw universal puller with adjustable reach from 500 mm to 500 mm, spread up to 650 mm

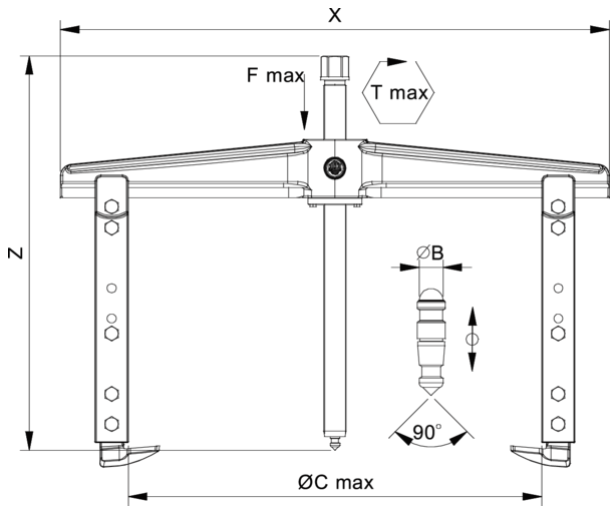

Abbreviation	Attribut	Wert
X	Total width [mm]	740 mm
Y	Total depth [mm]	85 mm
Z	Total height [mm]	550 mm
A	Clamping depth of external puller [mm]	500 mm
S1	Width across flats [mm]	36 mm
Cmin	Span outside pull-off (min.) [mm]	0 mm
Cmax	Span outside pull-off (max.) [mm]	650 mm
A1	Clamping depth of external pull-off A1 [mm]	350 mm
A2	Clamping depth outside pull-off A2 [mm]	400 mm
A3	Clamping depth external pull-off A3 [mm]	450 mm
A4	Clamping depth outside pull-off A4 [mm]	500 mm
K	Hook root thickness at the tip (claw thickness K) [mm]	5 mm
J	Hook base width (claw width J) [mm]	45 mm
O	Hook base depth usable (claw depth usable O) [mm]	50 mm
H	Total hook root depth (total claw depth H) [mm]	82 mm
L	Total claw thickness (L+1mm) [mm]: (claw distance to base surface)	30 mm
Emin	Span inside pull-out (min.) [mm]	200 mm
Emax	Span inside pull-out (max.) [mm]	710 mm
Tmax	Max. torque [Nm]	400 Nm
Fmax	Max. tractive force [t]	12 t
Fmax	Max. tensile force [kN]	120 kN

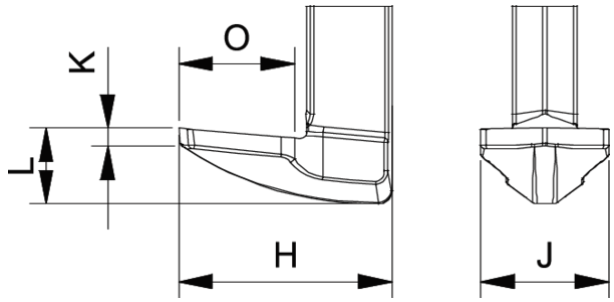

Abbreviation	Attribut	Wert
X	Total width [mm]	740 mm
Y	Total depth [mm]	85 mm
Z	Total height [mm]	550 mm
A	Clamping depth of external puller [mm]	500 mm
S1	Width across flats [mm]	36 mm

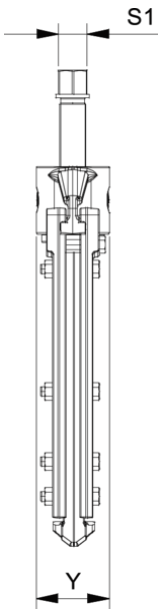

Abbreviation	Attribut	Wert
X	Total width [mm]	740 mm
Y	Total depth [mm]	85 mm
Z	Total height [mm]	550 mm
A	Clamping depth of external puller [mm]	500 mm
S1	Width across flats [mm]	36 mm
Cmin	Span outside pull-off (min.) [mm]	0 mm
Cmax	Span outside pull-off (max.) [mm]	650 mm
A1	Clamping depth of external pull-off A1 [mm]	350 mm
A2	Clamping depth outside pull-off A2 [mm]	400 mm
A3	Clamping depth external pull-off A3 [mm]	450 mm
A4	Clamping depth outside pull-off A4 [mm]	500 mm
K	Hook root thickness at the tip (claw thickness K) [mm]	5 mm
J	Hook base width (claw width J) [mm]	45 mm
O	Hook base depth usable (claw depth usable O) [mm]	50 mm
H	Total hook root depth (total claw depth H) [mm]	82 mm
L	Total claw thickness (L+1mm) [mm]: (claw distance to base surface)	30 mm
Emin	Span inside pull-out (min.) [mm]	200 mm
Emax	Span inside pull-out (max.) [mm]	710 mm
Tmax	Max. torque [Nm]	400 Nm
Fmax	Max. tractive force [t]	12 t
Fmax	Max. tensile force [kN]	120 kN

Cmin	Span outside pull-off (min.) [mm]	0 mm
Cmax	Span outside pull-off (max.) [mm]	650 mm
A1	Clamping depth of external pull-off A1 [mm]	350 mm
A2	Clamping depth outside pull-off A2 [mm]	400 mm
A3	Clamping depth external pull-off A3 [mm]	450 mm
A4	Clamping depth outside pull-off A4 [mm]	500 mm
K	Hook root thickness at the tip (claw thickness K) [mm]	5 mm
J	Hook base width (claw width J) [mm]	45 mm
O	Hook base depth usable (claw depth usable O) [mm]	50 mm
H	Total hook root depth (total claw depth H) [mm]	82 mm
L	Total claw thickness (L+1mm) [mm]: (claw distance to base surface)	30 mm
Emin	Span inside pull-out (min.) [mm]	200 mm
Emax	Span inside pull-out (max.) [mm]	710 mm
Tmax	Max. torque [Nm]	400 Nm
Fmax	Max. tractive force [t]	12 t
Fmax	Max. tensile force [kN]	120 kN

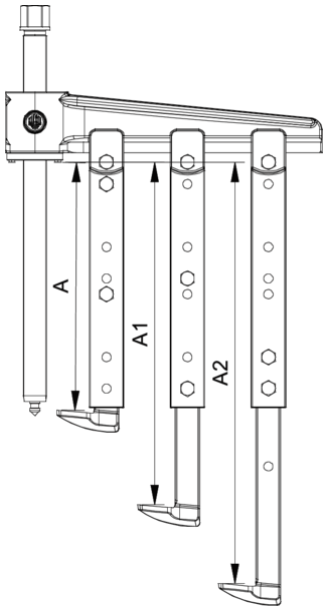

Abbreviation	Attribut	Wert
X	Total width [mm]	740 mm
Y	Total depth [mm]	85 mm
Z	Total height [mm]	550 mm
A	Clamping depth of external puller [mm]	500 mm
S1	Width across flats [mm]	36 mm
Cmin	Span outside pull-off (min.) [mm]	0 mm
Cmax	Span outside pull-off (max.) [mm]	650 mm
A1	Clamping depth of external pull-off A1 [mm]	350 mm
A2	Clamping depth outside pull-off A2 [mm]	400 mm
A3	Clamping depth external pull-off A3 [mm]	450 mm
A4	Clamping depth outside pull-off A4 [mm]	500 mm
K	Hook root thickness at the tip (claw thickness K) [mm]	5 mm
J	Hook base width (claw width J) [mm]	45 mm
O	Hook base depth usable (claw depth usable O) [mm]	50 mm
H	Total hook root depth (total claw depth H) [mm]	82 mm
L	Total claw thickness (L+1mm) [mm]: (claw distance to base surface)	30 mm
Emin	Span inside pull-out (min.) [mm]	200 mm
Emax	Span inside pull-out (max.) [mm]	710 mm
Tmax	Max. torque [Nm]	400 Nm
Fmax	Max. tractive force [t]	12 t
Fmax	Max. tensile force [kN]	120 kN

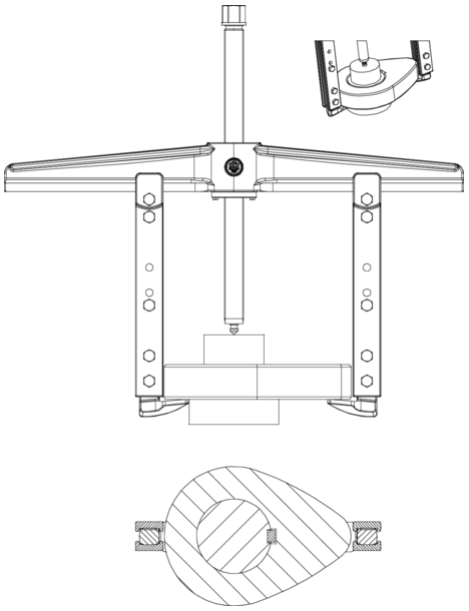

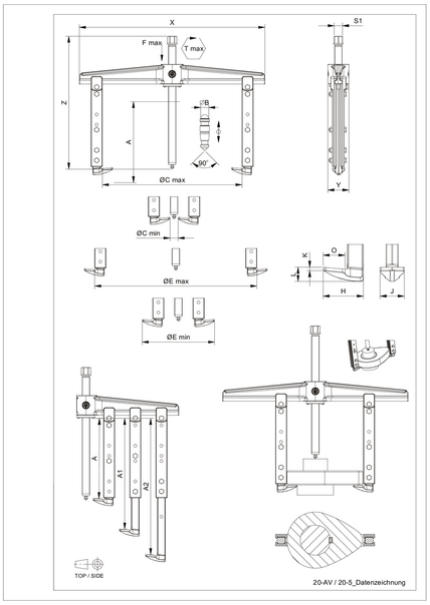

Abbreviation	Attribut	Wert
X	Total width [mm]	740 mm
Y	Total depth [mm]	85 mm
Z	Total height [mm]	550 mm
A	Clamping depth of external puller [mm]	500 mm
S1	Width across flats [mm]	36 mm
Cmin	Span outside pull-off (min.) [mm]	0 mm
Cmax	Span outside pull-off (max.) [mm]	650 mm
A1	Clamping depth of external pull-off A1 [mm]	350 mm
A2	Clamping depth outside pull-off A2 [mm]	400 mm
A3	Clamping depth external pull-off A3 [mm]	450 mm

Abbreviation	Attribut	Wert
X	Total width [mm]	740 mm
Y	Total depth [mm]	85 mm
Z	Total height [mm]	550 mm
A	Clamping depth of external puller [mm]	500 mm
S1	Width across flats [mm]	36 mm
Cmin	Span outside pull-off (min.) [mm]	0 mm
Cmax	Span outside pull-off (max.) [mm]	650 mm
A1	Clamping depth of external pull-off A1 [mm]	350 mm
A2	Clamping depth outside pull-off A2 [mm]	400 mm
A3	Clamping depth external pull-off A3 [mm]	450 mm

A4	Clamping depth outside pull-off A4 [mm]	500 mm
K	Hook root thickness at the tip (claw thickness K) [mm]	5 mm
J	Hook base width (claw width J) [mm]	45 mm
O	Hook base depth usable (claw depth usable O) [mm]	50 mm
H	Total hook root depth (total claw depth H) [mm]	82 mm
L	Total claw thickness (L+1mm) [mm]: (claw distance to base surface)	30 mm
Emin	Span inside pull-out (min.) [mm]	200 mm
Emax	Span inside pull-out (max.) [mm]	710 mm
Tmax	Max. torque [Nm]	400 Nm
Fmax	Max. tractive force [t]	12 t
Fmax	Max. tensile force [kN]	120 kN

A4	Clamping depth outside pull-off A4 [mm]	500 mm
K	Hook root thickness at the tip (claw thickness K) [mm]	5 mm
J	Hook base width (claw width J) [mm]	45 mm
O	Hook base depth usable (claw depth usable O) [mm]	50 mm
H	Total hook root depth (total claw depth H) [mm]	82 mm
L	Total claw thickness (L+1mm) [mm]: (claw distance to base surface)	30 mm
Emin	Span inside pull-out (min.) [mm]	200 mm
Emax	Span inside pull-out (max.) [mm]	710 mm
Tmax	Max. torque [Nm]	400 Nm
Fmax	Max. tractive force [t]	12 t
Fmax	Max. tensile force [kN]	120 kN