HYDRAULIC PUMP UNIT 380V/50HZ/3P

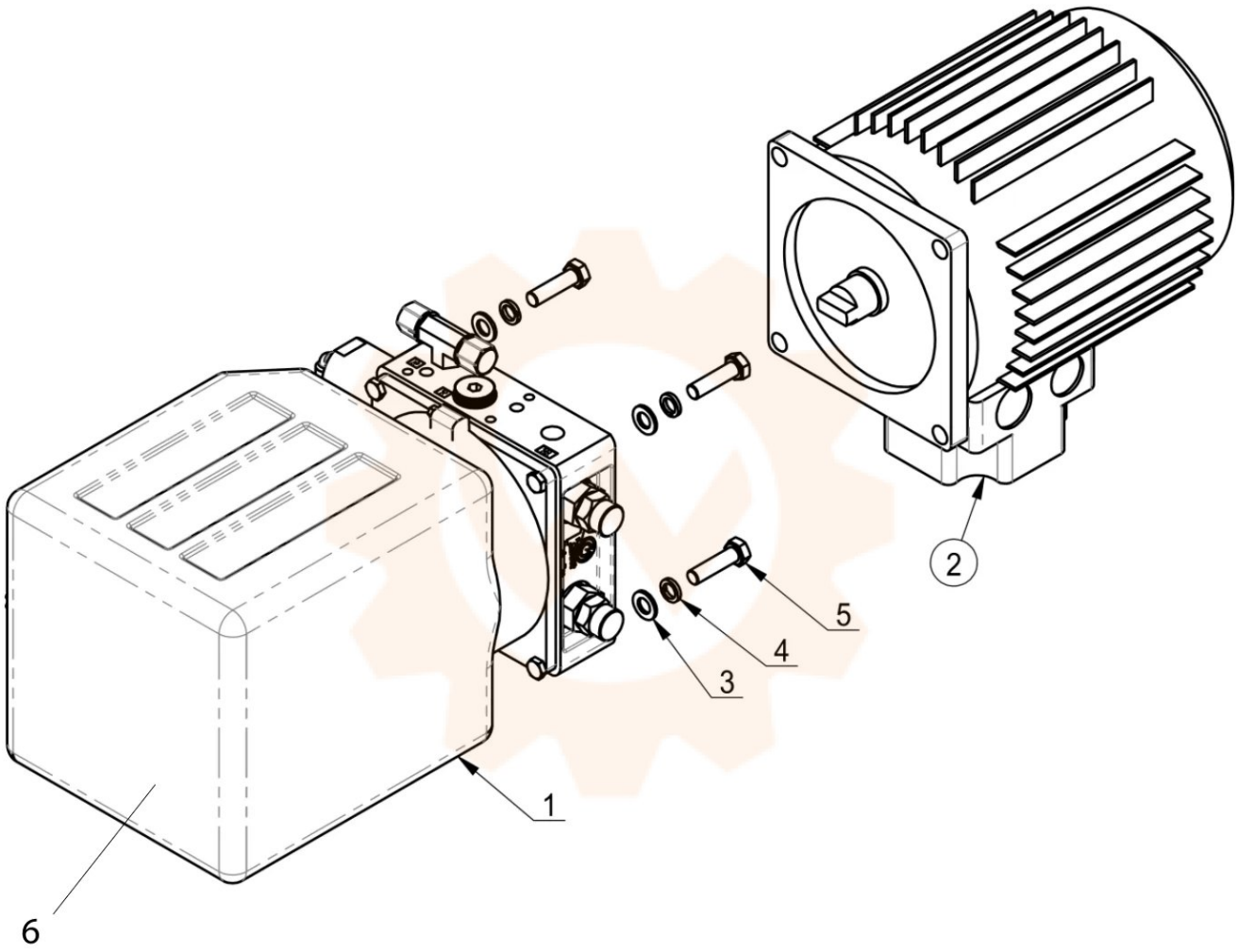

MODEL 3.2 Ton 380V/50HZ/3P 250bar

MODEL 3.6 Ton 380V/50HZ/3P 290bar