30-20xS 3-jaw universal puller with narrow, quick adjustment jaws, up to 200 mm spread, 150 mm reach



APPLICATION IMAGE



DESCRIPTION

The 3-jaw universal pullers of series 30xS with narrow, quick adjustment jaws are used for the safe and user-friendly pulling of bearings, gears, and disks in all standard sizes for crafts, workshops, and industry. This allows any component that sits on a shaft and is freely accessible from the outside to be removed. The narrow jaws ensure that even tight and hard-to-reach spaces can be accessed. The green soft-touch knurls guarantee the highest level of operating comfort even with wet or oily hands. The 3-jaw design ensures even load distribution and thus particularly secure grip on the part to be pulled.

APPLICATION AREA

For the safe and user-friendly removal of bearings, gears, and discs in all common sizes for crafts, workshops, and industry.

BENEFIT

- Narrow jaws grip optimally in tight and hard-to-reach places.
- 3-jaw ensures an even distribution of force and allows for greater pulling forces.
- Simple manual release of the jaws using hand knobs (Quick Adjust Technology)
- Application also for eccentric components through freely movable, sliding puller jaws on the crossbar.
- Hexagonal profile on the crossbar for secure counter-holding
- Quick-adjustable jaws guarantee an immediate adjustment to any span between 16 mm – 200 mm
- Anti-slip safety suspension of the claw in the sliding piece (Armlock Technology)
- Safe setup of the spindle through a swivel spindle tip on both smooth surfaces and during centering (Switch Technology)
- Optional convertible from an External Puller to an Internal Extractor by flipping the Jaws.
- Jaws, spindle, and crossbar have a spare part number for easy reordering.
- Spindle outlet for thread protection
- Pullers are labeled with technical attributes and manufacturer information (label)

OPERATION

- Place the pulling jaws from the outside on the part to be removed
- Slide the claws under the component
- Use the hand knob for manual attachment of the jaws
- Manually pull the spindle for fixation
- Put the hexagon at the spindle head into motion with a ratchet or a combination wrench until the component is loosened

MASTER DATA

GTIN [GTIN]	4021176080425
Country of origin	DE
Material	Tool steel
Series	30xS
Gross weight [kg]	4,42 kg
Package contents	1 piece
Packaging Act	PAPPE PAP 21
Worldwide sales capability	Yes (REACH, RoHS, POP, PROP65, TSCA)

SPARE PARTS

- 2-153-Sx_3 narrow, quick-adjustable jaws (set)
- 30-20-T3_Crossbar
- 620260_Two-sided spindle tip
- 621220_Mechanical pressure spindle

3-jaw universal puller with narrow, quick adjustment jaws, up to 200 mm spread, 150 mm reach

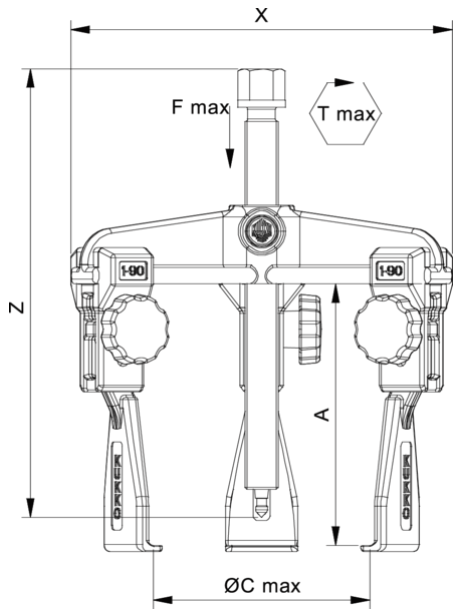

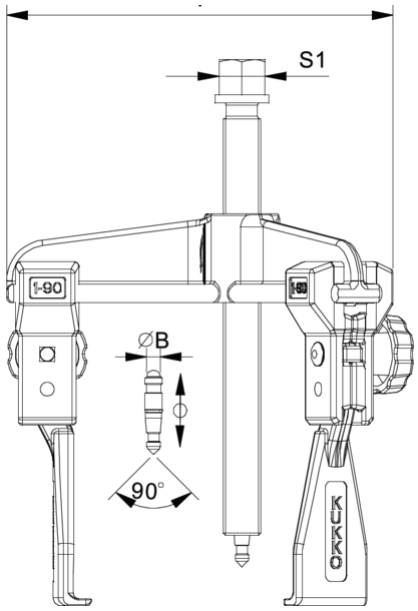

Abbreviation	Attribut	Wert
X	Total width [mm]	260 mm
Y	Total depth [mm]	260 mm
Z	Total height [mm]	254 mm
A	Clamping depth of external puller [mm]	150 mm
S1	Width across flats [mm]	22 mm
Cmin	Span outside pull-off (min.) [mm]	16 mm
Cmax	Span outside pull-off (max.) [mm]	200 mm
K	Hook root thickness at the tip (claw thickness K) [mm]	3 mm
J	Hook base width (claw width J) [mm]	30 mm
O	Hook base depth usable (claw depth usable O) [mm]	9,5 mm
H	Total hook root depth (total claw depth H) [mm]	13 mm
L	Total claw thickness (L+1mm) [mm]: (claw distance to base surface)	2,6 mm
Emin	Span inside pull-out (min.) [mm]	100 mm
Emax	Span inside pull-out (max.) [mm]	260 mm
Tmax	Max. torque [Nm]	120 Nm
Fmax	Max. tractive force [t]	5 t
Fmax	Max. tensile force [kN]	50 kN

Abbreviation	Attribut	Wert
X	Total width [mm]	260 mm
Y	Total depth [mm]	260 mm
Z	Total height [mm]	254 mm
A	Clamping depth of external puller [mm]	150 mm
S1	Width across flats [mm]	22 mm
Cmin	Span outside pull-off (min.) [mm]	16 mm
Cmax	Span outside pull-off (max.) [mm]	200 mm
K	Hook root thickness at the tip (claw thickness K) [mm]	3 mm
J	Hook base width (claw width J) [mm]	30 mm
O	Hook base depth usable (claw depth usable O) [mm]	9,5 mm
H	Total hook root depth (total claw depth H) [mm]	13 mm
L	Total claw thickness (L+1mm) [mm]: (claw distance to base surface)	2,6 mm
Emin	Span inside pull-out (min.) [mm]	100 mm
Emax	Span inside pull-out (max.) [mm]	260 mm
Tmax	Max. torque [Nm]	120 Nm
Fmax	Max. tractive force [t]	5 t
Fmax	Max. tensile force [kN]	50 kN

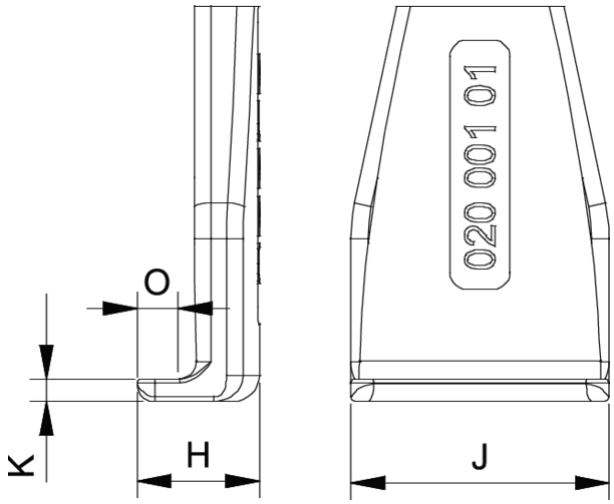

Abbreviation	Attribut	Wert

X	Total width [mm]	260 mm
Y	Total depth [mm]	260 mm
Z	Total height [mm]	254 mm
A	Clamping depth of external puller [mm]	150 mm
S1	Width across flats [mm]	22 mm
Cmin	Span outside pull-off (min.) [mm]	16 mm
Cmax	Span outside pull-off (max.) [mm]	200 mm
K	Hook root thickness at the tip (claw thickness K) [mm]	3 mm
J	Hook base width (claw width J) [mm]	30 mm
O	Hook base depth usable (claw depth usable O) [mm]	9,5 mm
H	Total hook root depth (total claw depth H) [mm]	13 mm
L	Total claw thickness (L+1mm) [mm]: (claw distance to base surface)	2,6 mm
Emin	Span inside pull-out (min.) [mm]	100 mm
Emax	Span inside pull-out (max.) [mm]	260 mm
Tmax	Max. torque [Nm]	120 Nm
Fmax	Max. tractive force [t]	5 t
Fmax	Max. tensile force [kN]	50 kN

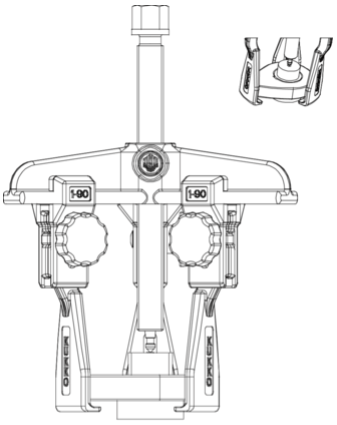

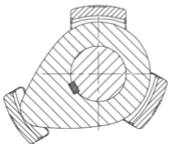

Abbreviation	Attribut	Wert
X	Total width [mm]	260 mm
Y	Total depth [mm]	260 mm
Z	Total height [mm]	254 mm
A	Clamping depth of external puller [mm]	150 mm
S1	Width across flats [mm]	22 mm
Cmin	Span outside pull-off (min.) [mm]	16 mm
Cmax	Span outside pull-off (max.) [mm]	200 mm
K	Hook root thickness at the tip (claw thickness K) [mm]	3 mm
J	Hook base width (claw width J) [mm]	30 mm
O	Hook base depth usable (claw depth usable O) [mm]	9,5 mm
H	Total hook root depth (total claw depth H) [mm]	13 mm
L	Total claw thickness (L+1mm) [mm]: (claw distance to base surface)	2,6 mm
Emin	Span inside pull-out (min.) [mm]	100 mm
Emax	Span inside pull-out (max.) [mm]	260 mm
Tmax	Max. torque [Nm]	120 Nm
Fmax	Max. tractive force [t]	5 t
Fmax	Max. tensile force [kN]	50 kN