Hendel | Mondolfo Ferro 4-103256A

Mondolfo Ferro Aquila AS 944 LL · 2026 · Tekening 80 · positie 9

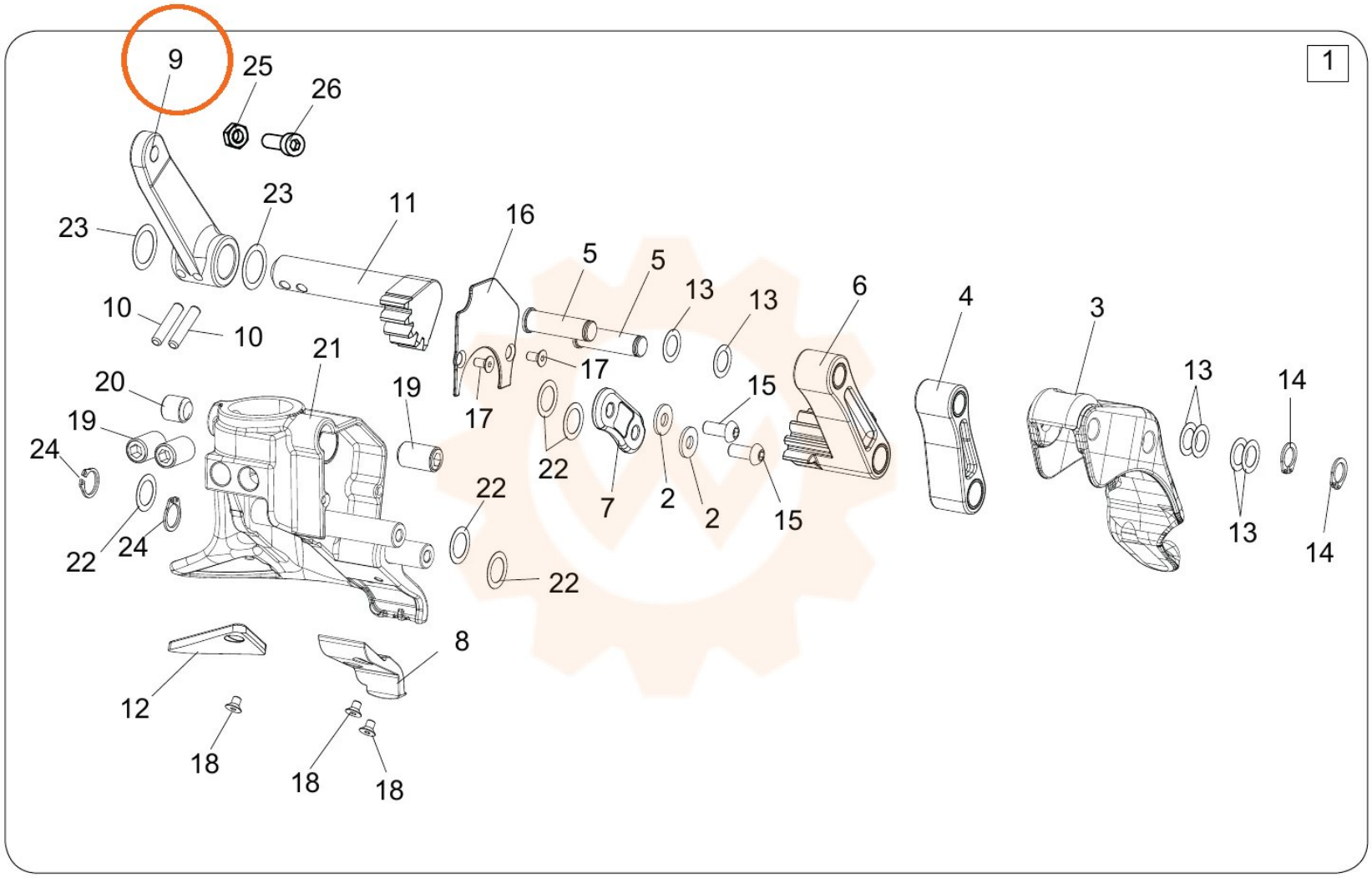
1
9
25
26
23
23
11
16
5
5
13
13
6
4
3
10
10
21
17
17
20
19
19
15
13
14
24
22
22
7
2
2
15
13
14
22
24
22
8
12
18
18
18