Reservekit | Mondolfo Ferro 5-201347

Mondolfo Ferro Brm S-Box NG S2 · 2020 · Tekening 2 · positie 11

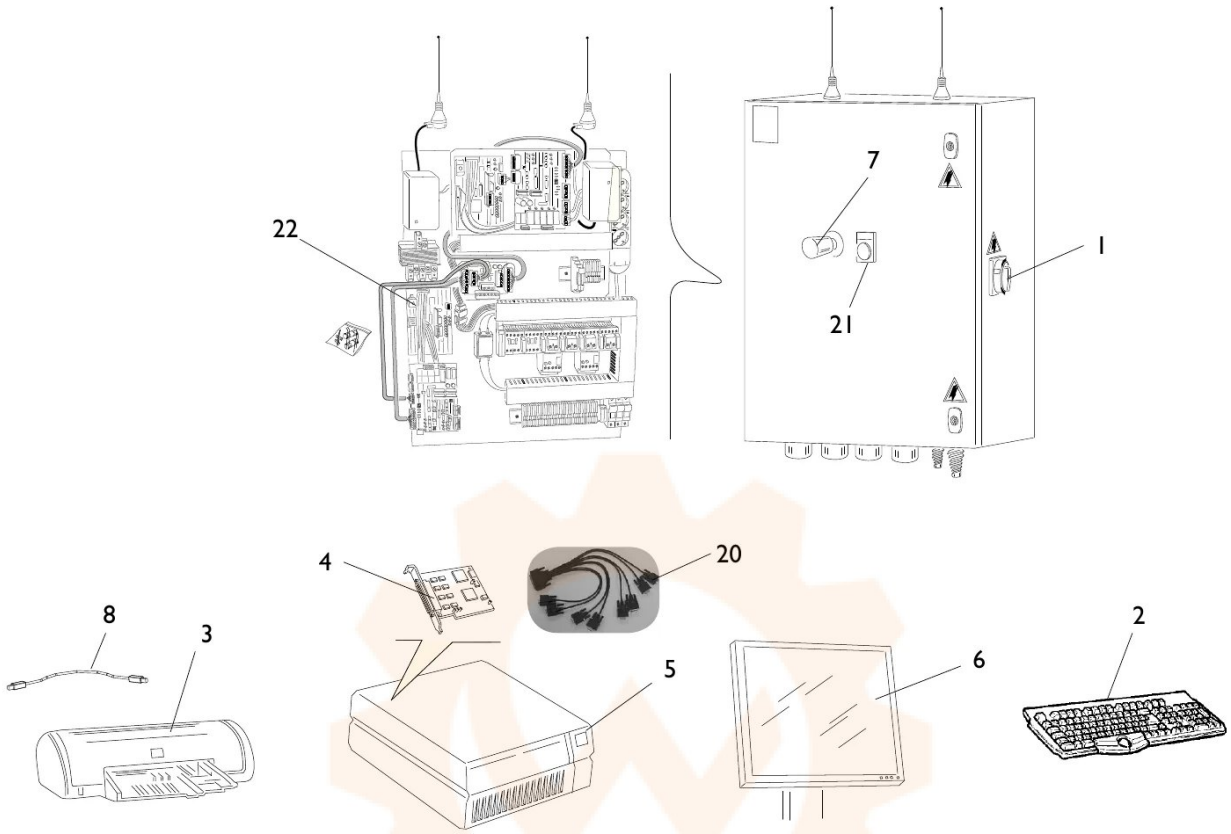

ACCESSORI
ACCESSORIES

