20-5 2-jaw universal puller with adjustable reach from 400 mm to 750 mm, spread up to 750 mm



APPLICATION IMAGE



DESCRIPTION

The 2-jaw universal puller with adjustable reach is used for removing bearings, gears, and discs in all common sizes for crafts, workshops, and industry. The 20-5 is the largest of its kind worldwide and thus the most powerful puller of the 20 series. It can loosen any component that sits on a shaft and is accessible from the outside. The puller adapts to every pulling situation due to its individually adjustable spread and reach and guarantees particularly safe, non-destructive disassembly both for external extraction and internal extraction.

APPLICATION AREA

To remove bearings, gears, and discs in all common sizes for craft, workshop, and industry.

BENEFIT

- The screw connection allows easy loosening and particularly tight fastening of the jaws with an allen key
- Application also for eccentric components through freely movable, sliding jaws on the crossbar.
- Hexagonal profile on the crossbar for secure counter-holding
- Variable adjustment to any spread between 0 mm – 750 mm
- Shear-safe suspension of the claw in the sliding piece (ARMLOCK Technology)
- Safe positioning of the spindle through a rotatable spindle tip on both smooth surfaces and during centering (SWITCH Technology)
- Optional convertible from an external puller to an internal extractor by reversing the jaws.
- Anti-slip safety (spindle neck) at the spindle head for safe working with socket wrench.
- Spindle run-out to protect the thread
- Jaws, spindle, and crossbar have a spare part number for easy reordering.
- Pullers are labeled with technical attributes and manufacturer information (label)

OPERATION

- Place the puller jaws from the outside onto the part to be pulled off
- Slide the claws under the component
- Use a wrench to secure the jaws
- Manually pull the spindle for fixation
- Set the hexagon at the spindle head in motion with a ratchet or a box wrench until the component is released

MASTER DATA

GTIN [GTIN]	4021176009846
Country of origin	DE
Material	Tool steel
Series	20-Classic
Gross weight [kg]	47 kg
Package contents	1 piece
Packaging Act	PAPPE PAP 21
Worldwide sales capability	Yes (REACH, RoHS, POP, PROP65, TSCA)

SPARE PARTS

- 20-5-T_traverse with socket for 20-5
- 5-SP-P_jaws with adjustable length (pair)
- 633370_Double-sided spindle tip
- 637600_Mechanical spindle

2-jaw universal puller with adjustable reach from 400 mm to 750 mm, spread up to 750 mm

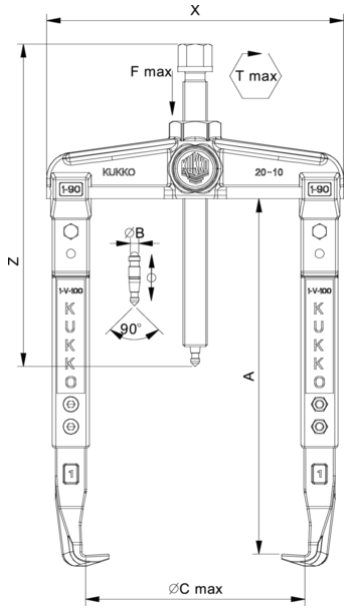

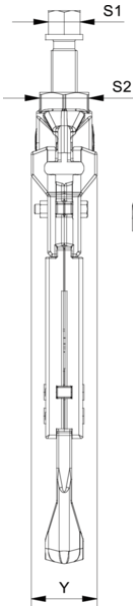

Abbreviation	Attribut	Wert
X	Total width [mm]	922 mm
Y	Total depth [mm]	105 mm
Z	Total height [mm]	666 mm
A	Clamping depth of external puller [mm]	400 mm
S1	Width across flats [mm]	41 mm
Cmin	Span outside pull-off (min.) [mm]	0 mm
Cmax	Span outside pull-off (max.) [mm]	750 mm
A1	Clamping depth of external pull-off A1 [mm]	500 mm
A2	Clamping depth outside pull-off A2 [mm]	550 mm
A3	Clamping depth external pull-off A3 [mm]	580 mm
A5	Clamping depth external peel-off A5 [mm]	750 mm
A4	Clamping depth outside pull-off A4 [mm]	600 mm
K	Hook root thickness at the tip (claw thickness K) [mm]	10 mm
J	Hook base width (claw width J) [mm]	60 mm
O	Hook base depth usable (claw depth usable O) [mm]	60 mm
H	Total hook root depth (total claw depth H) [mm]	100 mm
L	Total claw thickness (L+1mm) [mm]: (claw distance to base surface)	40 mm
Emin	Span inside pull-out (min.) [mm]	340 mm
Emax	Span inside pull-out (max.) [mm]	1.000 mm
Tmax	Max. torque [Nm]	650 Nm
Fmax	Max. tractive force [t]	15 t
Fmax	Max. tensile force [kN]	150 kN

Abbreviation	Attribut	Wert
X	Total width [mm]	922 mm
Y	Total depth [mm]	105 mm
Z	Total height [mm]	666 mm
A	Clamping depth of external puller [mm]	400 mm
S1	Width across flats [mm]	41 mm
Cmin	Span outside pull-off (min.) [mm]	0 mm
Cmax	Span outside pull-off (max.) [mm]	750 mm
A1	Clamping depth of external pull-off A1 [mm]	500 mm
A2	Clamping depth outside pull-off A2 [mm]	550 mm
A3	Clamping depth external pull-off A3 [mm]	580 mm
A5	Clamping depth external peel-off A5 [mm]	750 mm
A4	Clamping depth outside pull-off A4 [mm]	600 mm
K	Hook root thickness at the tip (claw thickness K) [mm]	10 mm
J	Hook base width (claw width J) [mm]	60 mm
O	Hook base depth usable (claw depth usable O) [mm]	60 mm
H	Total hook root depth (total claw depth H) [mm]	100 mm
L	Total claw thickness (L+1mm) [mm]: (claw distance to base surface)	40 mm
Emin	Span inside pull-out (min.) [mm]	340 mm
Emax	Span inside pull-out (max.) [mm]	1.000 mm
Tmax	Max. torque [Nm]	650 Nm
Fmax	Max. tractive force [t]	15 t
Fmax	Max. tensile force [kN]	150 kN

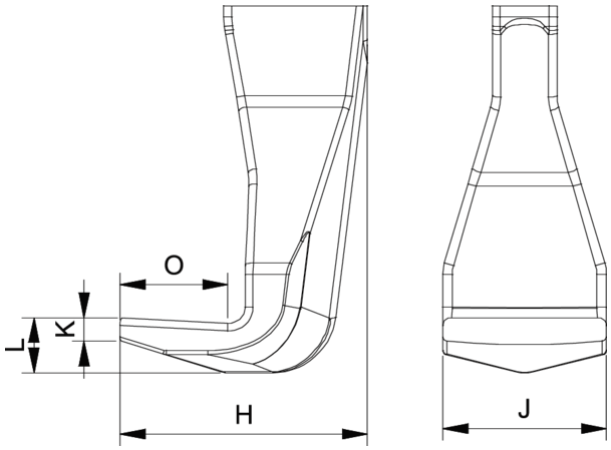

Abbreviation	Attribut	Wert
X	Total width [mm]	922 mm
Y	Total depth [mm]	105 mm
Z	Total height [mm]	666 mm
A	Clamping depth of external puller [mm]	400 mm
S1	Width across flats [mm]	41 mm
Cmin	Span outside pull-off (min.) [mm]	0 mm
Cmax	Span outside pull-off (max.) [mm]	750 mm
A1	Clamping depth of external pull-off A1 [mm]	500 mm
A2	Clamping depth outside pull-off A2 [mm]	550 mm
A3	Clamping depth external pull-off A3 [mm]	580 mm
A5	Clamping depth external peel-off A5 [mm]	750 mm
A4	Clamping depth outside pull-off A4 [mm]	600 mm
K	Hook root thickness at the tip (claw thickness K) [mm]	10 mm
J	Hook base width (claw width J) [mm]	60 mm
O	Hook base depth usable (claw depth usable O) [mm]	60 mm
H	Total hook root depth (total claw depth H) [mm]	100 mm
L	Total claw thickness (L+1mm) [mm]: (claw distance to base surface)	40 mm
Emin	Span inside pull-out (min.) [mm]	340 mm
Emax	Span inside pull-out (max.) [mm]	1.000 mm
Tmax	Max. torque [Nm]	650 Nm
Fmax	Max. tractive force [t]	15 t
Fmax	Max. tensile force [kN]	150 kN

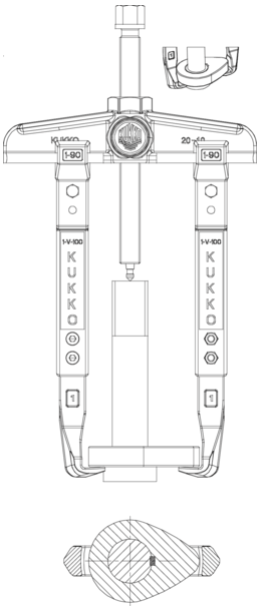

Abbreviation	Attribut	Wert
X	Total width [mm]	922 mm
Y	Total depth [mm]	105 mm
Z	Total height [mm]	666 mm
A	Clamping depth of external puller [mm]	400 mm
S1	Width across flats [mm]	41 mm
Cmin	Span outside pull-off (min.) [mm]	0 mm
Cmax	Span outside pull-off (max.) [mm]	750 mm
A1	Clamping depth of external pull-off A1 [mm]	500 mm
A2	Clamping depth outside pull-off A2 [mm]	550 mm
A3	Clamping depth external pull-off A3 [mm]	580 mm
A5	Clamping depth external peel-off A5 [mm]	750 mm
A4	Clamping depth outside pull-off A4 [mm]	600 mm
K	Hook root thickness at the tip (claw thickness K) [mm]	10 mm
J	Hook base width (claw width J) [mm]	60 mm
O	Hook base depth usable (claw depth usable O) [mm]	60 mm
H	Total hook root depth (total claw depth H) [mm]	100 mm
L	Total claw thickness (L+1mm) [mm]: (claw distance to base surface)	40 mm
Emin	Span inside pull-out (min.) [mm]	340 mm
Emax	Span inside pull-out (max.) [mm]	1.000 mm
Tmax	Max. torque [Nm]	650 Nm
Fmax	Max. tractive force [t]	15 t
Fmax	Max. tensile force [kN]	150 kN

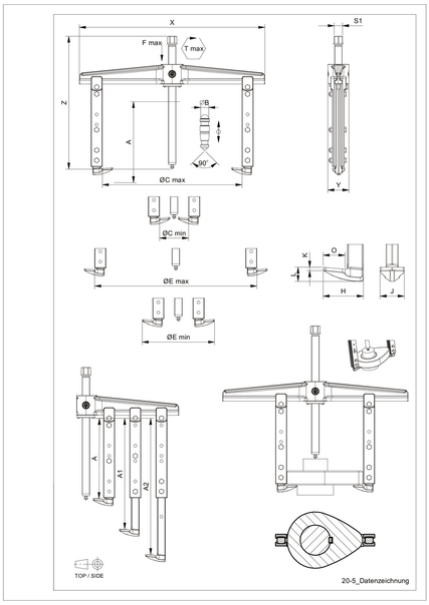

Abbreviation	Attribut	Wert
X	Total width [mm]	922 mm
Y	Total depth [mm]	105 mm
Z	Total height [mm]	666 mm
A	Clamping depth of external puller [mm]	400 mm
S1	Width across flats [mm]	41 mm
Cmin	Span outside pull-off (min.) [mm]	0 mm
Cmax	Span outside pull-off (max.) [mm]	750 mm

A1	Clamping depth of external pull-off A1 [mm]	500 mm
A2	Clamping depth outside pull-off A2 [mm]	550 mm
A3	Clamping depth external pull-off A3 [mm]	580 mm
A5	Clamping depth external peel-off A5 [mm]	750 mm
A4	Clamping depth outside pull-off A4 [mm]	600 mm
K	Hook root thickness at the tip (claw thickness K) [mm]	10 mm
J	Hook base width (claw width J) [mm]	60 mm
O	Hook base depth usable (claw depth usable O) [mm]	60 mm
H	Total hook root depth (total claw depth H) [mm]	100 mm
L	Total claw thickness (L+1mm) [mm]: (claw distance to base surface)	40 mm
Emin	Span inside pull-out (min.) [mm]	340 mm
Emax	Span inside pull-out (max.) [mm]	1.000 mm
Tmax	Max. torque [Nm]	650 Nm
Fmax	Max. tractive force [t]	15 t
Fmax	Max. tensile force [kN]	150 kN