Ronde dop D. 30 x 14,5 | Mondolfo Ferro 450101

Corghi Exact 70 Plus · 2020 · Rotating platform low-medium-high · positie 13 (2 keer op deze tekening)

PIATTO ROTANTE BASSO-MEDIO-ALTO
ROTATING PLATFORM LOW-MEDIUM-HIGH

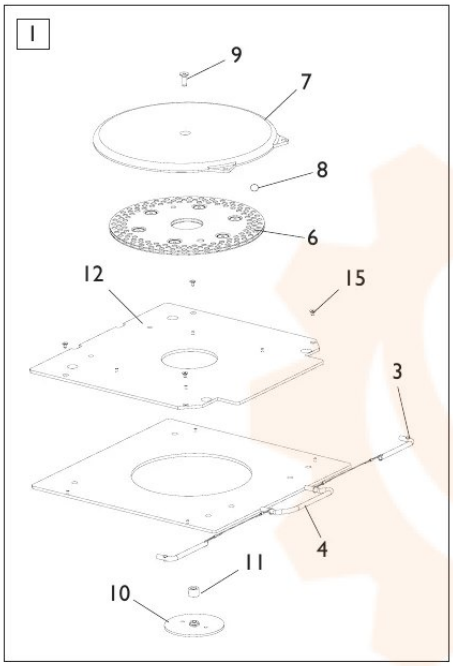

VERSIONE BASSO-MEDIO
LOW-MEDIUM VERSION

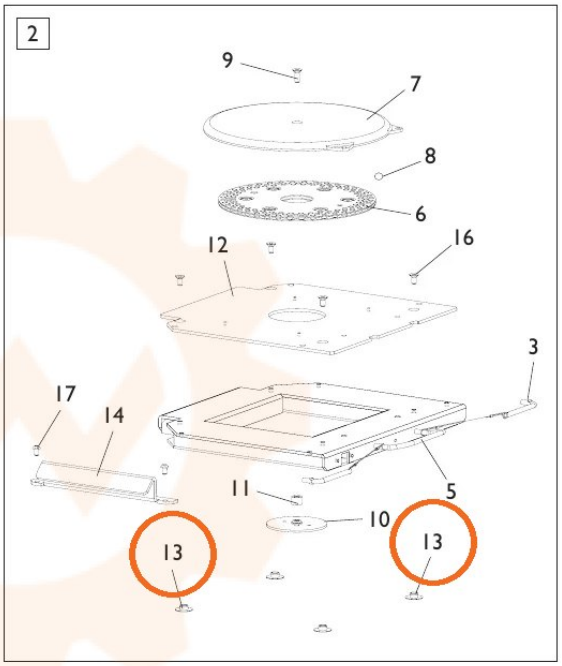

VERSIONE ALTO-ALTO H.50
HIGH-HIGH H.50 VERSION

TORNA AL COMPLESSIVO
RETURNS TO OVERALL

Onderdelentekening Mondolfo Ferro · Workshopparts B.V. · workshopparts.nl · artikelnummer 902525