Borgmoer M6 | Mondolfo Ferro 2-01979

Corghi EM9980 · 2017 · EYELIGHT-EM9980 rear detector kit · positie 4 (2 keer op deze tekening)

KIT RILEVATORE POSTERIORE EYELIGHT-EM9980
EYELIGHT-EM9980 REAR DETECTOR KIT

VISTA ANTERIORE
FRONT VIEW

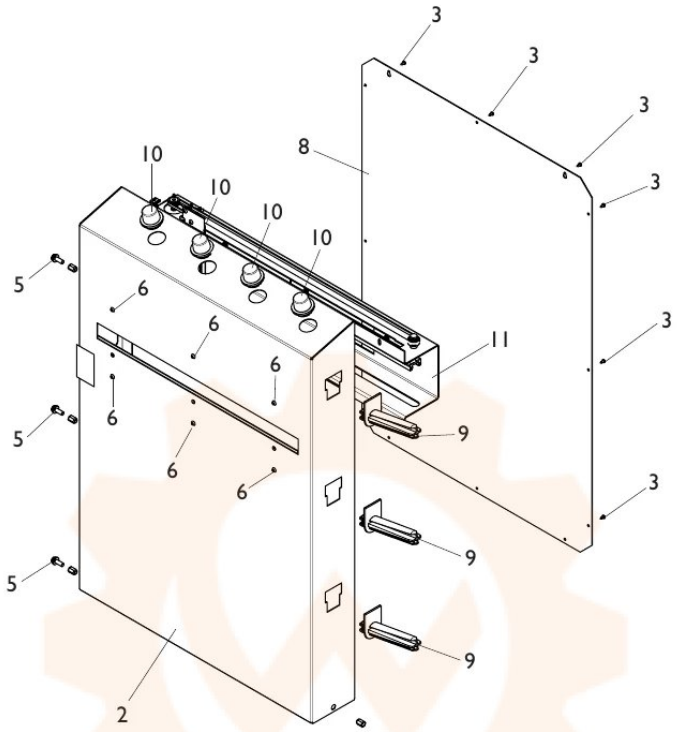

VISTA POSTERIORE
REAR VIEW

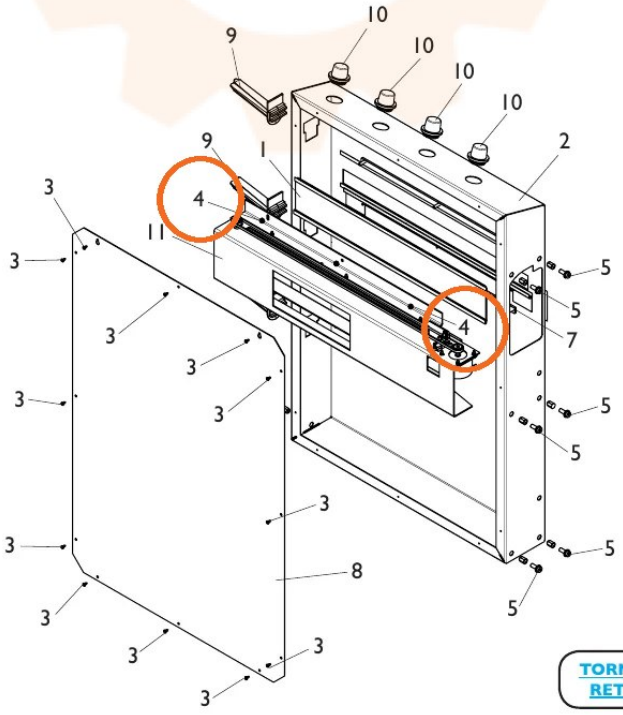

TORNA AL COMPLESSIVO
RETURNS TO OVERALL

Onderdelentekening Mondolfo Ferro · Workshopparts B.V. · workshopparts.nl · artikelnummer 900615