114-1 2-/3-jaw combination puller with self-centering jaws 2 t



APPLICATION AREA

For pulling off bearings, gears, discs, and similar components

BENEFIT

- Self-centering jaws with spring tension (Autogrip Technology)
- Optional convertible from an external puller to an internal extractor by reversing the jaws.
- The combination crossbar allows for both 2-jaw and 3-jaw Pulling.
- 3-jaw ensures an even distribution of force and allows for greater pulling forces.

MASTER DATA

GTIN [GTIN]	4021176892400
Country of origin	DE
Material	Tool steel
Series	114
Gross weight [kg]	0,835 kg
Package contents	1 piece
Packaging Act	PAPPE PAP 21
Worldwide sales capability	Yes (REACH, RoHS, POP, PROP65, TSCA)

APPLICATION IMAGE



DETAIL IMAGE



2-/3-jaw combination puller with self-centering jaws 2 t

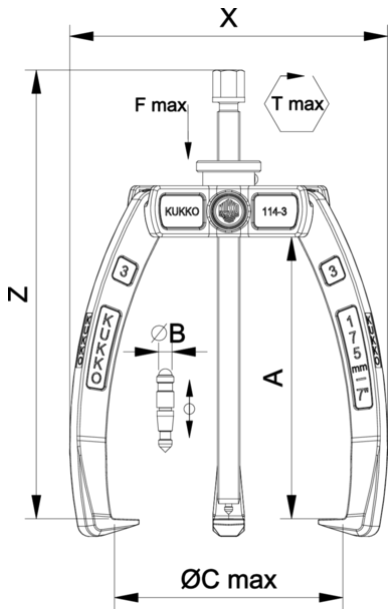

Abbreviation	Attribut	Wert
A	Clamping depth of external puller [mm]	75 mm
S1	Width across flats [mm]	13
Cmin	Span outside pull-off (min.) [mm]	0 mm
Cmax	Span outside pull-off (max.) [mm]	75 mm
Emin	Span inside pull-out (min.) [mm]	55 mm
Emax	Span inside pull-out (max.) [mm]	85 mm
Tmax	Max. torque [Nm]	40 Nm
Fmax	Max. tractive force [t]	2 t
Fmax	Max. tensile force [kN]	20 kN

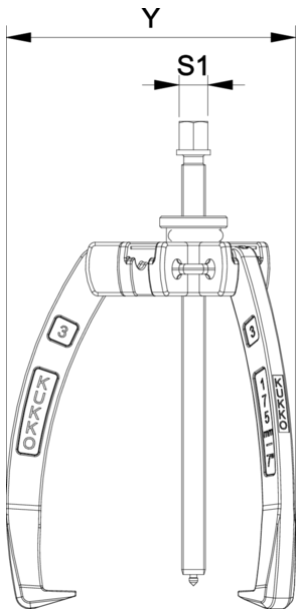

Abbreviation	Attribut	Wert
A	Clamping depth of external puller [mm]	75 mm
S1	Width across flats [mm]	13
Cmin	Span outside pull-off (min.) [mm]	0 mm
Cmax	Span outside pull-off (max.) [mm]	75 mm
Emin	Span inside pull-out (min.) [mm]	55 mm
Emax	Span inside pull-out (max.) [mm]	85 mm
Tmax	Max. torque [Nm]	40 Nm
Fmax	Max. tractive force [t]	2 t
Fmax	Max. tensile force [kN]	20 kN

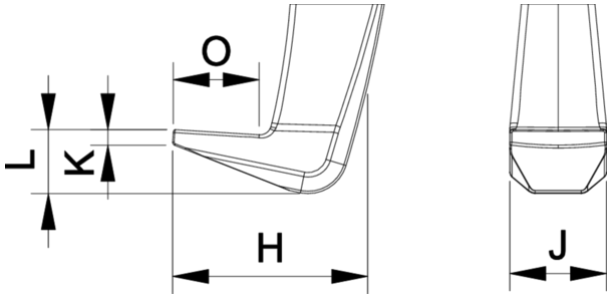

Abbreviation	Attribut	Wert
A	Clamping depth of external puller [mm]	75 mm
S1	Width across flats [mm]	13
Cmin	Span outside pull-off (min.) [mm]	0 mm
Cmax	Span outside pull-off (max.) [mm]	75 mm
Emin	Span inside pull-out (min.) [mm]	55 mm
Emax	Span inside pull-out (max.) [mm]	85 mm
Tmax	Max. torque [Nm]	40 Nm
Fmax	Max. tractive force [t]	2 t
Fmax	Max. tensile force [kN]	20 kN

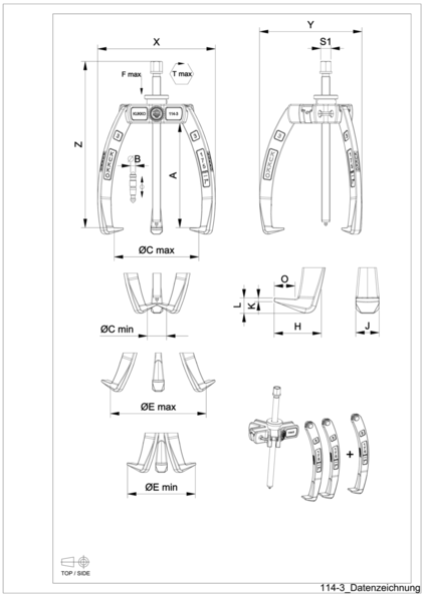

Abbreviation	Attribut	Wert
A	Clamping depth of external puller [mm]	75 mm
S1	Width across flats [mm]	13
Cmin	Span outside pull-off (min.) [mm]	0 mm
Cmax	Span outside pull-off (max.) [mm]	75 mm

Emin	Span inside pull-out (min.) [mm]	55 mm
Emax	Span inside pull-out (max.) [mm]	85 mm
Tmax	Max. torque [Nm]	40 Nm
Fmax	Max. tractive force [t]	2 t
Fmax	Max. tensile force [kN]	20 kN