Koppeling 2520 - 1/4 | Mondolfo Ferro 3-00082

Mondolfo Ferro AS914 TI · 2026 · Tekening 6 · positie 54

FINO A MATR. / UP TO S/N CSF014921

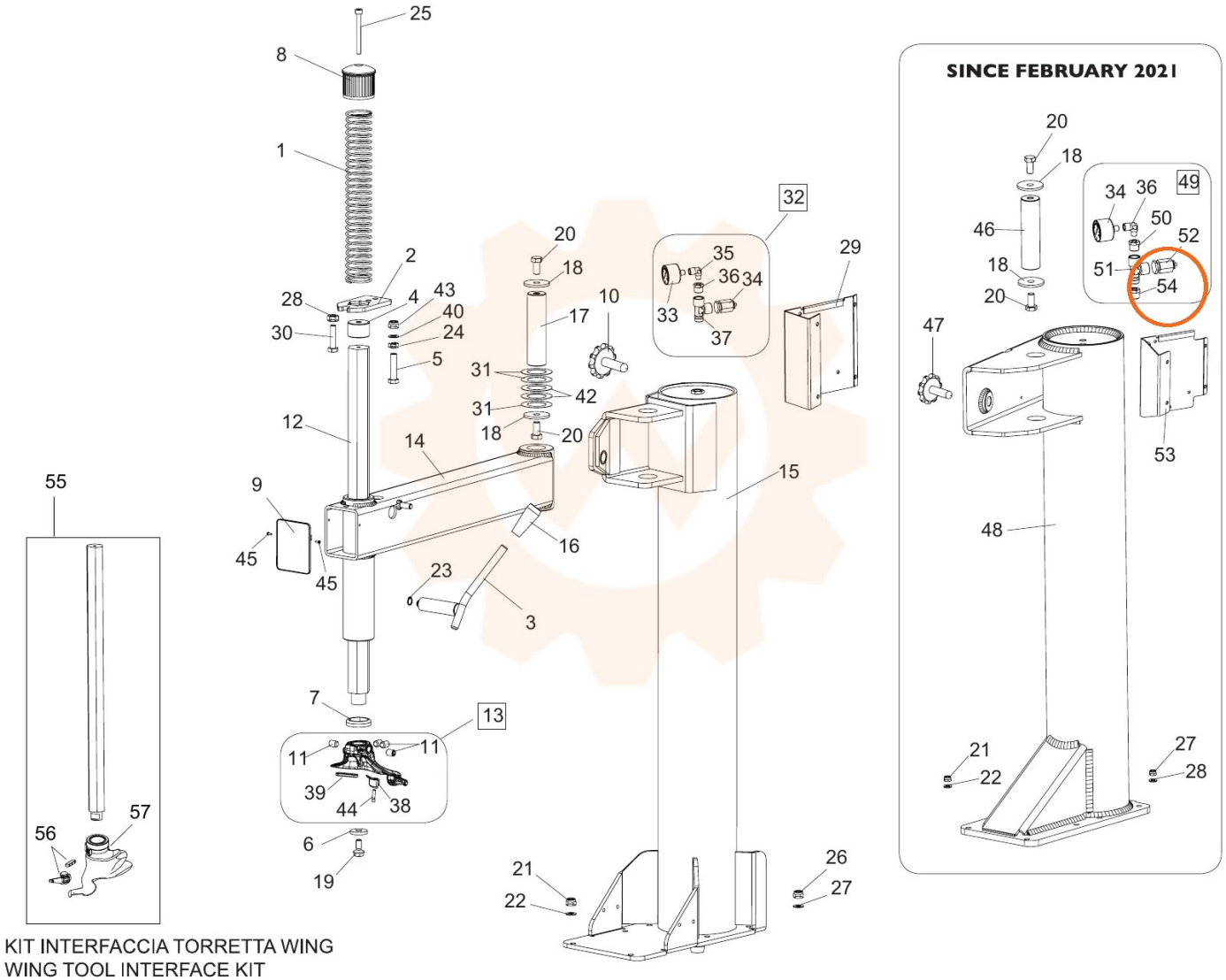

KIT INTERFACCIA TORRETTA WING
WING TOOL INTERFACE KIT