GA12-34 Thread adapter GA12-34



DESCRIPTION

Thread adapters are spare parts that allow flexible connections between different threads, thereby providing more flexible application possibilities.

APPLICATION AREA

Spare part for KUKKO tools

MASTER DATA

GTIN [GTIN]	4021176774430
Country of origin	DE
Material	Tool steel
Series	GA
Gross weight [kg]	0,42 kg
Package contents	1 piece
Packaging Act	PAPPE PAP 21
Worldwide sales capability	Yes (REACH, RoHS, POP, PROP65, TSCA)

DETAIL IMAGE



Thread adapter GA12-34

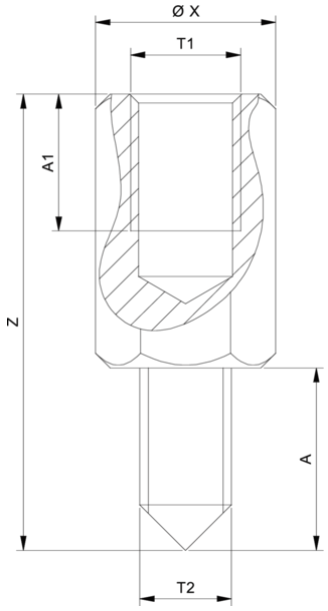

Abbreviation	Attribut	Wert

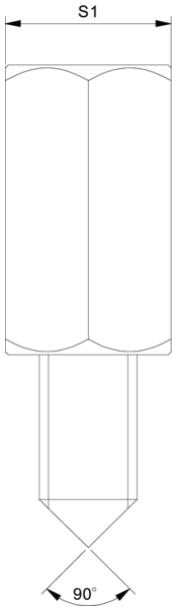

Abbreviation	Attribut	Wert

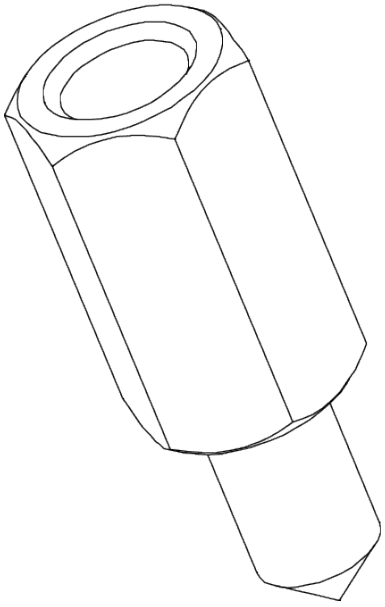

Abbreviation	Attribut	Wert