203-0 2- and 3-jaw Puller with reversible jaws, combination crossbar, up to 120 mm spread, 75 mm reach



DESCRIPTION

The 2-jaw and 3-jaw puller with crossbar features oscillating and reversible jaws and is used for centric pulling of bearings, gears, and disks in all common sizes for craft, workshop, and industry. This allows for the removal of any component that sits on a shaft and is freely accessible from the outside. The swiveling jaws with adjustable spread are applicable on both sides. Depending on the design, the claw shape varies. Thanks to the crossbar, the puller can be used as both a 2-jaw and 3-jaw tool. The 3-jaw configuration ensures an even load distribution and thus a particularly secure grip on the part being extracted.

APPLICATION AREA

For the centric withdrawal of bearings, gears, and disks in all common sizes for trade, workshop, and industry.

BENEFIT

- Thanks to the combination crossbar, the puller can be used for 2-jaw and 3-jaw pulling.
- Adjustable and 180° rotatable puller jaws for individual adaptation of the reach.
- Oscillating jaws offer a variety of adjustment options.
- Pulling arms with different jaw shapes for flexible working.
- Claw end with slot provides support for screw for additional support when pulling off
- Secure mounting of the spindle through the rotatable spindle tip on both smooth surfaces and in centering (Switch Technology)
- 3-jaw ensures an even distribution of force and allows for greater pulling forces.
- Anti-slip safety (spindle neck) at spindle head for safe working with wrench
- Spindle outlet to protect the thread

OPERATION

- Position the puller jaws from the outside onto the part to be removed
- Swing the jaws under the component
- Manually pull the spindle to fix it in place
- Use a ratchet or a ring spanner to turn the hexagon at the spindle head until the component is loosened

APPLICATION IMAGE



MASTER DATA

GTIN [GTIN]	4021176027666
Country of origin	DE
Material	Tool steel
Series	203
Gross weight [kg]	0,66 kg
Package contents	1 piece
Packaging Act	Rezykkat rHDPE 61
Worldwide sales capability	Yes (REACH, RoHS, POP, PROP65, TSCA)

SPARE PARTS

- 202-0-75-S_3 jaws (set)
- 203-0-T_crossbar
- 612080_Mechanical spindle

2- and 3-jaw Puller with reversible jaws, combination crossbar, up to 120 mm spread, 75 mm reach

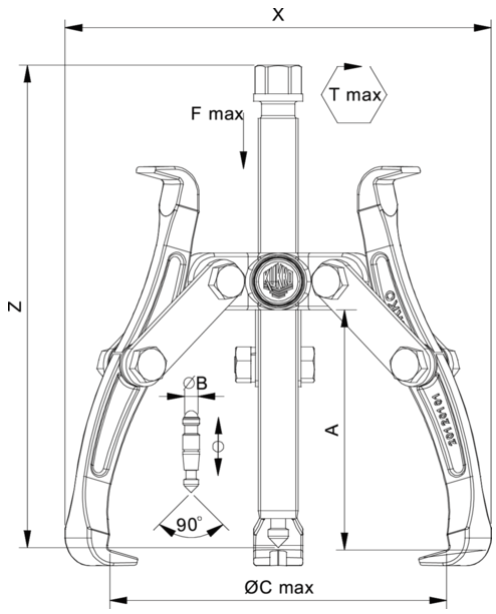

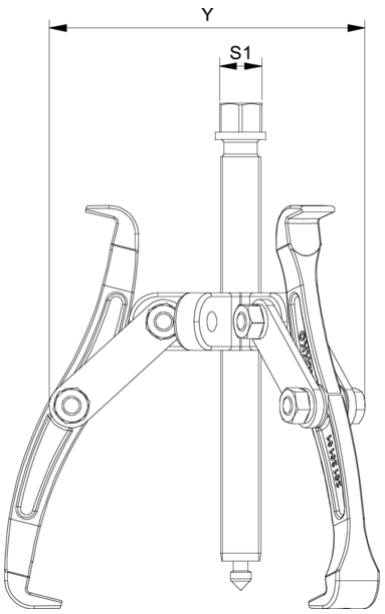

Abbreviation	Attribut	Wert
X	Total width [mm]	132 mm
Y	Total depth [mm]	132 mm
Z	Total height [mm]	105 mm
A	Clamping depth of external puller [mm]	75 mm
S1	Width across flats [mm]	13 mm
Cmin	Span outside pull-off (min.) [mm]	0 mm
Cmax	Span outside pull-off (max.) [mm]	120 mm
K	Hook root thickness at the tip (claw thickness K) [mm]	3 mm
J	Hook base width (claw width J) [mm]	11 mm
O	Hook base depth usable (claw depth usable O) [mm]	8 mm
H	Total hook root depth (total claw depth H) [mm]	14 mm
L	Total claw thickness (L+1mm) [mm]: (claw distance to base surface)	6 mm
Emin	Span inside pull-out (min.) [mm]	45 mm
Tmax	Max. torque [Nm]	25 Nm
Fmax	Max. tractive force [t]	1.5 t
Fmax	Max. tensile force [kN]	15 kN

Abbreviation	Attribut	Wert
X	Total width [mm]	132 mm
Y	Total depth [mm]	132 mm
Z	Total height [mm]	105 mm
A	Clamping depth of external puller [mm]	75 mm
S1	Width across flats [mm]	13 mm
Cmin	Span outside pull-off (min.) [mm]	0 mm
Cmax	Span outside pull-off (max.) [mm]	120 mm
K	Hook root thickness at the tip (claw thickness K) [mm]	3 mm
J	Hook base width (claw width J) [mm]	11 mm
O	Hook base depth usable (claw depth usable O) [mm]	8 mm
H	Total hook root depth (total claw depth H) [mm]	14 mm
L	Total claw thickness (L+1mm) [mm]: (claw distance to base surface)	6 mm
Emin	Span inside pull-out (min.) [mm]	45 mm
Tmax	Max. torque [Nm]	25 Nm
Fmax	Max. tractive force [t]	1.5 t
Fmax	Max. tensile force [kN]	15 kN

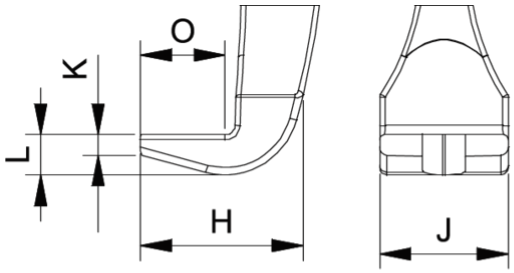

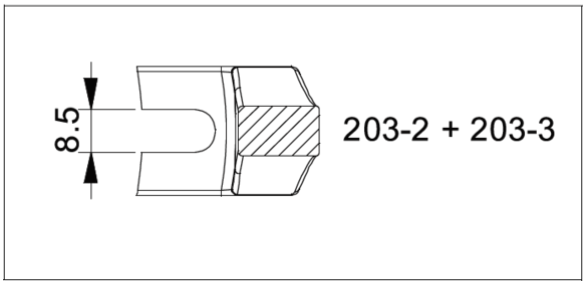

Abbreviation	Attribut	Wert
X	Total width [mm]	132 mm
Y	Total depth [mm]	132 mm
Z	Total height [mm]	105 mm
A	Clamping depth of external puller [mm]	75 mm
S1	Width across flats [mm]	13 mm
Cmin	Span outside pull-off (min.) [mm]	0 mm
Cmax	Span outside pull-off (max.) [mm]	120 mm
K	Hook root thickness at the tip (claw thickness K) [mm]	3 mm
J	Hook base width (claw width J) [mm]	11 mm
O	Hook base depth usable (claw depth usable O) [mm]	8 mm
H	Total hook root depth (total claw depth H) [mm]	14 mm
L	Total claw thickness (L+1mm) [mm]: (claw distance to base surface)	6 mm
Emin	Span inside pull-out (min.) [mm]	45 mm
Tmax	Max. torque [Nm]	25 Nm
Fmax	Max. tractive force [t]	1.5 t
Fmax	Max. tensile force [kN]	15 kN

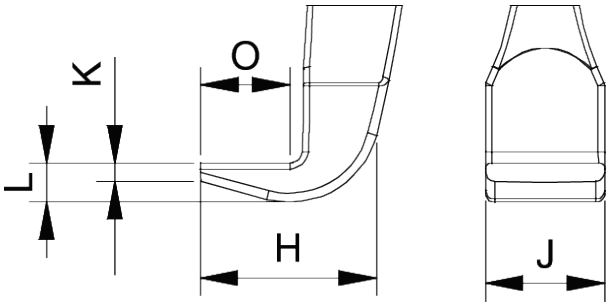

Abbreviation	Attribut	Wert
X	Total width [mm]	132 mm
Y	Total depth [mm]	132 mm
Z	Total height [mm]	105 mm
A	Clamping depth of external puller [mm]	75 mm
S1	Width across flats [mm]	13 mm
Cmin	Span outside pull-off (min.) [mm]	0 mm
Cmax	Span outside pull-off (max.) [mm]	120 mm
K	Hook root thickness at the tip (claw thickness K) [mm]	3 mm
J	Hook base width (claw width J) [mm]	11 mm
O	Hook base depth usable (claw depth usable O) [mm]	8 mm
H	Total hook root depth (total claw depth H) [mm]	14 mm
L	Total claw thickness (L+1mm) [mm]: (claw distance to base surface)	6 mm
Emin	Span inside pull-out (min.) [mm]	45 mm
Tmax	Max. torque [Nm]	25 Nm
Fmax	Max. tractive force [t]	1.5 t
Fmax	Max. tensile force [kN]	15 kN