| CORGHI | ET 77 - ET 88 | Fig. L | 02 / 11 | Motore |
|---|---|---|---|---|

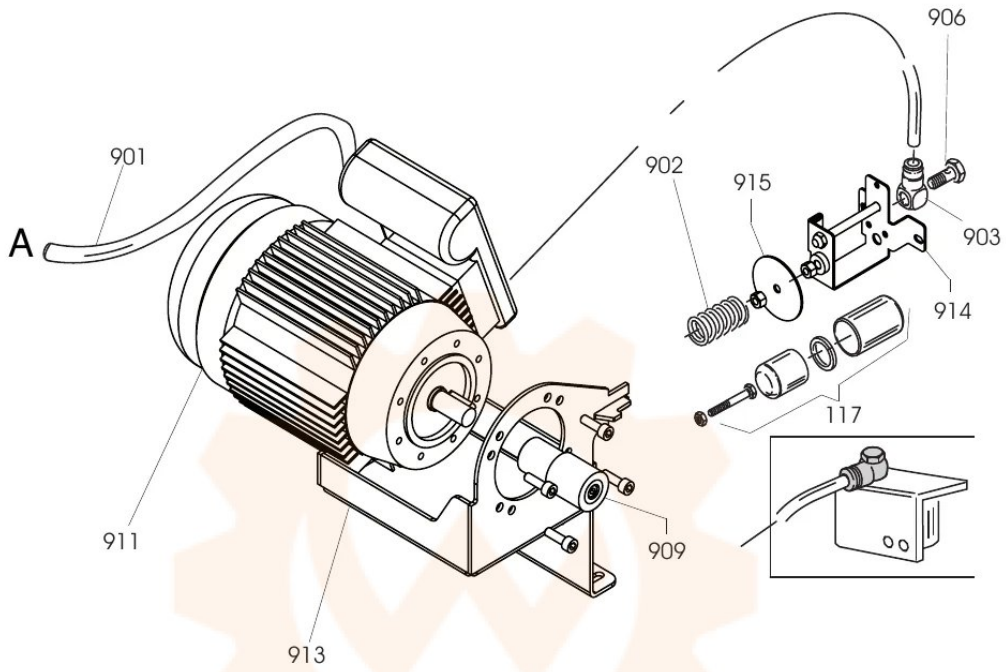


| | | | |
|---|---|---|---|
| 0117 | 244969 | CILINDRO | CYLINDER |
| 0901 | 458306 | CAVO | CABLE |
| 0902 | 453109 | MOLLA | SPRING |
| 0903 | 246472 | RACCORDO | CONNECTOR |
| 0906 | 3-00070 | VITE | SCREW |
| 0909 | 453134 | RULLO | ROLLER |
| 0911 | 453035 | MOTORE 230V | MOTOR 230V. |
| 0911 | 453036 | MOTORE 115V. | MOTOR 115V. |
| 0913 | 5-104030 | SUPPORTO | SUPPORT |
| 0914 | 4-111534 | SUPPORTO | SUPPORT |
| 0915 | 4-107780 | RONDELLA | WASHER |