| CORGHI | ET 77 - ET 88 | Fig. N | 01 / 07 | Collegamento Pneumatico |
|---|---|---|---|---|

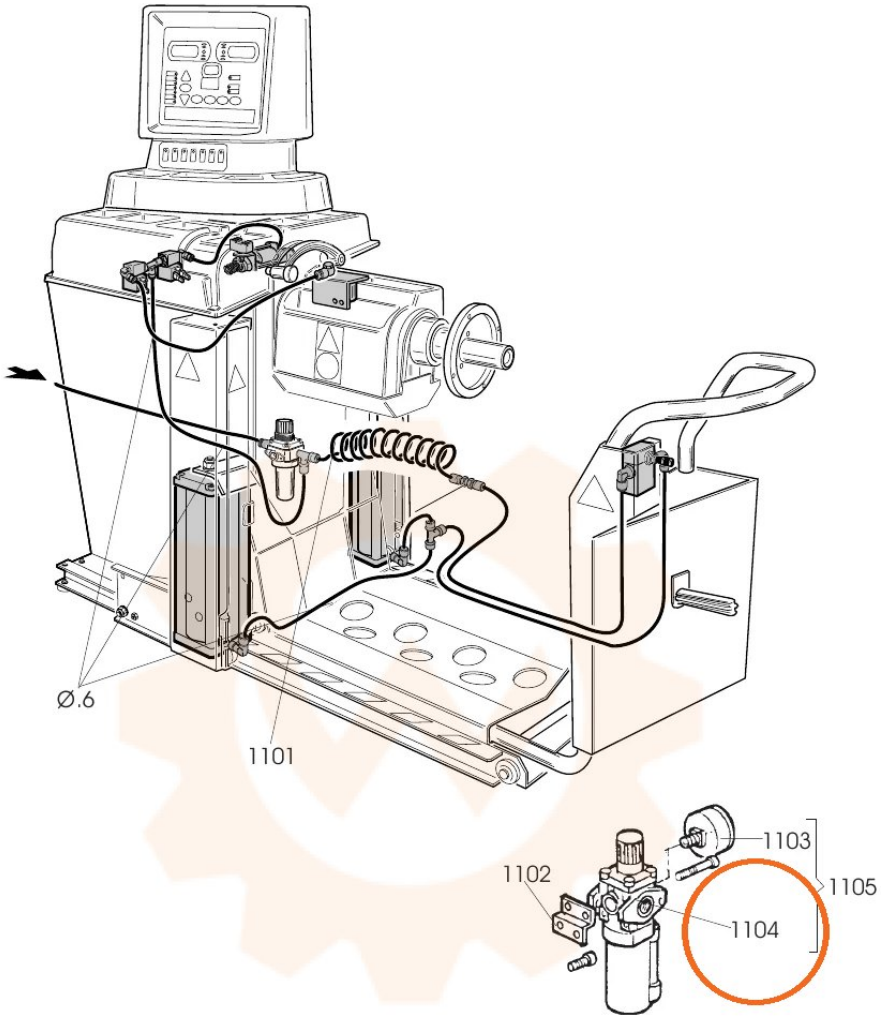


| | | | |
|---|---|---|---|
| Ø.6 | 1-01684 | TUBO | PIPE |
| 1101 | 459357 | TUBO | PIPE |
| 1102 | 333683 | STAFFA | BRACKET |
| 1103 | 3-00488 | MANOMETRO | PRESSURE GAUGE |
| 1104 | 3-00346 | FILTRO | FILTER |
| 1105 | 345244 | FILTRO CPL. | FILTER KIT |