Schroef M8 x 16 | Mondolfo Ferro 2-02046

Mondolfo Ferro Trigon 725 Platinum-S · 2016 · Tekening 14 · positie 16

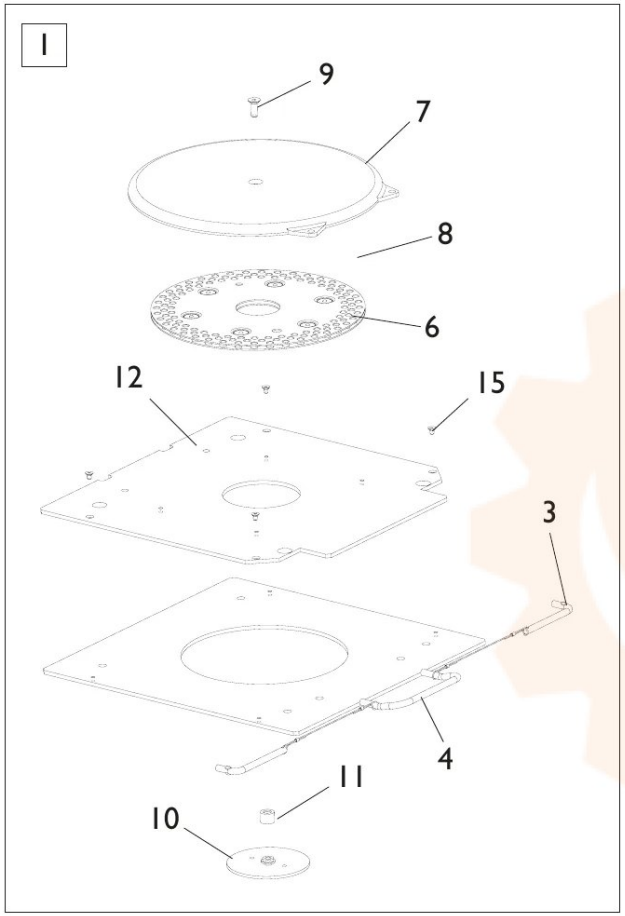

VERSIONE BASSO-MEDIO
LOW-MEDIUM VERSION

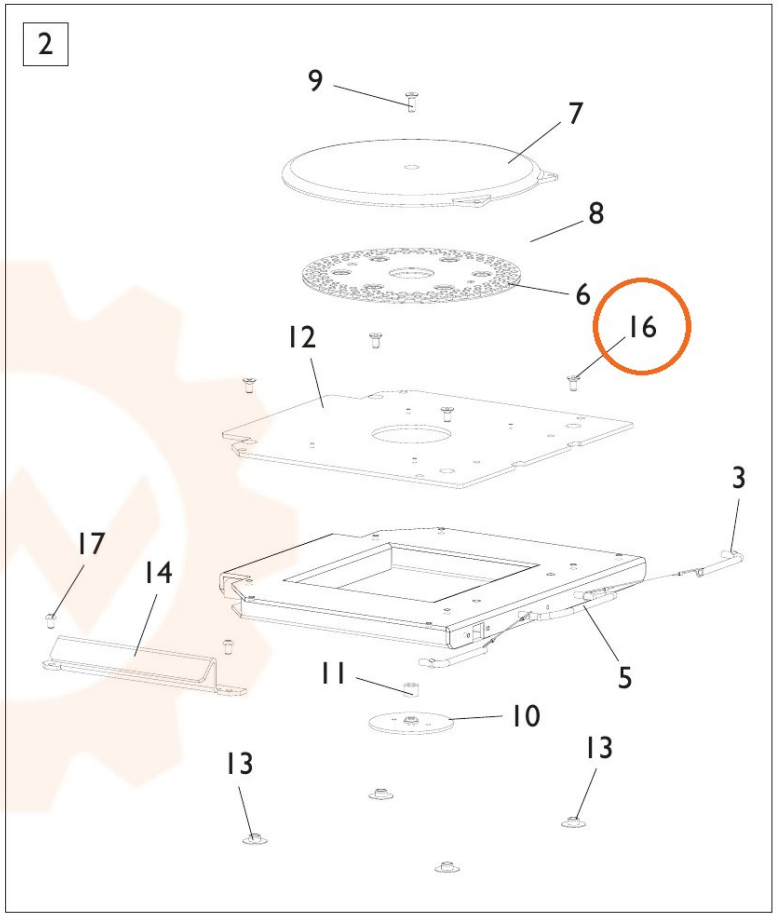

VERSIONE ALTO-ALTO H.50
HIGH-HIGH H.50 VERSION