14-02 2-jaw puller with narrow, self-centering, crossed jaws, up to 140 mm spread, 125 mm reach



DESCRIPTION

The 2-jaw puller with narrow, self-gripping, intersecting jaws is used for extracting sprockets, pulleys, bearings, and similar components in tight spaces. Self-locking retaining pins ensure quick and easy adjustment for variable span ranges. The puller is self-gripping and easy to handle. During the extraction process, the scissor-like arm guidance presses the claws firmly against the part being pulled. This ensures a secure grip at all times.

APPLICATION AREA

To remove sprockets, pulleys, bearings, and similar components for tight spaces.

BENEFIT

- Fast and easy assembly of the jaws
- Extremely high spread range due to variable mounting of the jaws
- Span width and span depth can be individually adjusted.
- In confined spaces, the two jaws can be mounted first and then fixed in the second step with a crossbar and retaining pins.
- Self-locking stop pins that do not fall out while working thanks to ball retention.
- Puller jaws can be flipped, thereby increasing their spread range many times over.

OPERATION

- Position the puller jaws externally on the part to be removed
- Activate the hexagon at the spindle head with a ratchet or a ring spanner until the component is released

APPLICATION IMAGE



DETAIL IMAGE



MASTER DATA

GTIN [GTIN]	4021176774300
Country of origin	DE
Material	Tool steel
Series	14-S
Gross weight [kg]	1,6 kg
Package contents	1 piece
Packaging Act	PAPPE PAP 21
Worldwide sales capability	Yes (REACH, RoHS, POP, PROP65, TSCA)

SPARE PARTS

- 080804_Dowel pin pair
- 14-02-125-P_pullers (pair)
- 14-2-T_Crossbar
- 614160_Mechanical pressure spindle

2-jaw puller with narrow, self-centering, crossed jaws, up to 140 mm spread, 125 mm reach

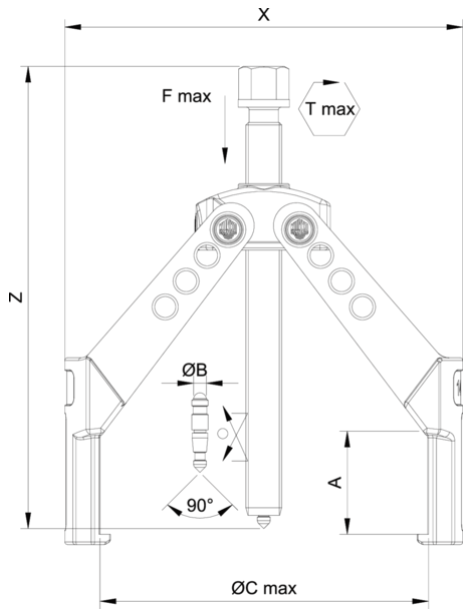

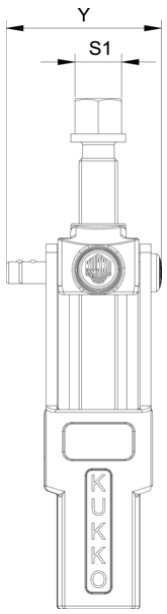

Abbreviation	Attribut	Wert
X	Total width [mm]	168 mm
Y	Total depth [mm]	51 mm
Z	Total height [mm]	181 mm
A	Clamping depth of external puller [mm]	125 mm
S1	Width across flats [mm]	17 mm
Cmin	Span outside pull-off (min.) [mm]	0 mm
Cmax	Span outside pull-off (max.) [mm]	140 mm
K	Hook root thickness at the tip (claw thickness K) [mm]	4 mm
J	Hook base width (claw width J) [mm]	12 mm
O	Hook base depth usable (claw depth usable O) [mm]	4 mm
H	Total hook root depth (total claw depth H) [mm]	13 mm
L	Total claw thickness (L+1mm) [mm]: (claw distance to base surface)	4 mm
Tmax	Max. torque [Nm]	30 Nm
Fmax	Max. tractive force [t]	1 t
Fmax	Max. tensile force [kN]	10 kN

Abbreviation	Attribut	Wert
X	Total width [mm]	168 mm
Y	Total depth [mm]	51 mm
Z	Total height [mm]	181 mm
A	Clamping depth of external puller [mm]	125 mm
S1	Width across flats [mm]	17 mm
Cmin	Span outside pull-off (min.) [mm]	0 mm
Cmax	Span outside pull-off (max.) [mm]	140 mm
K	Hook root thickness at the tip (claw thickness K) [mm]	4 mm
J	Hook base width (claw width J) [mm]	12 mm
O	Hook base depth usable (claw depth usable O) [mm]	4 mm
H	Total hook root depth (total claw depth H) [mm]	13 mm
L	Total claw thickness (L+1mm) [mm]: (claw distance to base surface)	4 mm
Tmax	Max. torque [Nm]	30 Nm
Fmax	Max. tractive force [t]	1 t
Fmax	Max. tensile force [kN]	10 kN

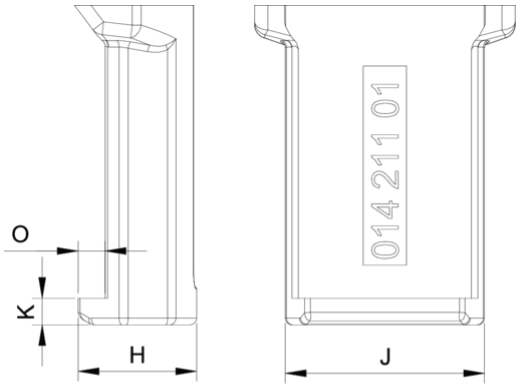

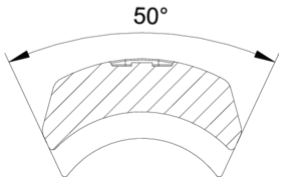

Abbreviation	Attribut	Wert
X	Total width [mm]	168 mm
Y	Total depth [mm]	51 mm
Z	Total height [mm]	181 mm
A	Clamping depth of external puller [mm]	125 mm
S1	Width across flats [mm]	17 mm
Cmin	Span outside pull-off (min.) [mm]	0 mm
Cmax	Span outside pull-off (max.) [mm]	140 mm
K	Hook root thickness at the tip (claw thickness K) [mm]	4 mm
J	Hook base width (claw width J) [mm]	12 mm
O	Hook base depth usable (claw depth usable O) [mm]	4 mm
H	Total hook root depth (total claw depth H) [mm]	13 mm
L	Total claw thickness (L+1mm) [mm]: (claw distance to base surface)	4 mm
Tmax	Max. torque [Nm]	30 Nm
Fmax	Max. tractive force [t]	1 t
Fmax	Max. tensile force [kN]	10 kN